DTC	B1100/31	Center Airbag Sensor Assembly Malfunction

DESCRIPTION

The center airbag sensor assembly consists of the center airbag sensor assembly, safing sensor, drive circuit, diagnosis circuit and ignition control, etc.
It receives signals from the airbag sensor, judges whether or not the SRS must be activated, and detects diagnosis system malfunction.
DTC B1100/31 is recorded when a malfunction is detected in the center airbag sensor assembly circuit.

DTC No.	DTC Detecting Condition	Trouble Area
B1100/31	• Short in front airbag sensor RH circuit (to ground) • Short in front airbag sensor RH circuit (to B+) • Short in front airbag sensor RH circuit • Short in front airbag sensor LH circuit (to ground) • Short in front airbag sensor LH circuit (to B+) • Short in front airbag sensor LH circuit • Center airbag sensor assembly malfunction	• Center airbag sensor assembly • Engine room main wire • Instrument panel wire

RS

WIRING DIAGRAM

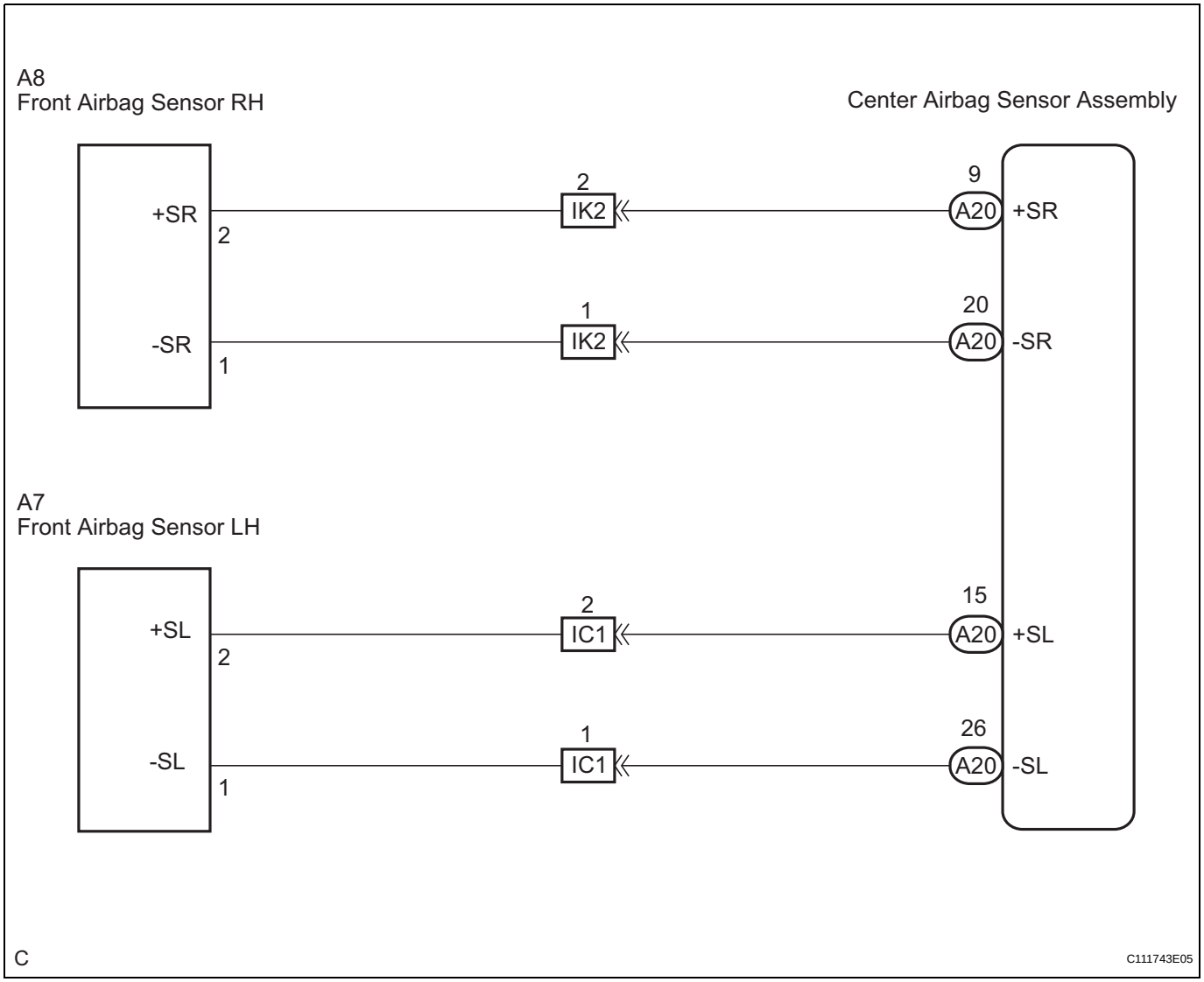

INSPECTION PROCEDURE

HINT:
When a trouble code is displayed simultaneously with B1100/31, repair the malfunction indicated by this code (except B1100/31) first.

1 CHECK FRONT AIRBAG SENSOR RH CIRCUIT (SHORT TO GROUND)

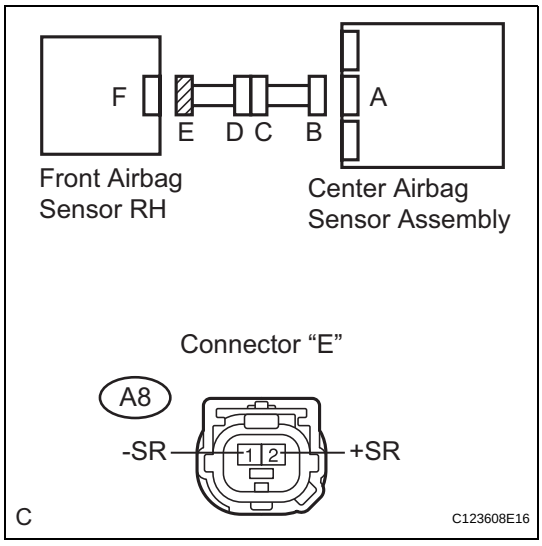

(a) Turn the ignition switch to the LOCK position.
(b) Disconnect the negative (-) terminal cable from the battery, and wait for at least 90 seconds.
(c) Disconnect the connectors from the front airbag sensor RH and the center airbag sensor assembly.
(d) Measure the resistance according to the value(s) in the table below.

Standard resistance

Tester connection	Condition	Specified condition
A8-2 (+SR) - Body ground	Always	1 MΩ or higher
A8-1 (-SR) - Body ground	Always	1 MΩ or higher

NG → **Go to step 8**

OK

2 CHECK FRONT AIRBAG SENSOR RH CIRCUIT (SHORT TO B+)

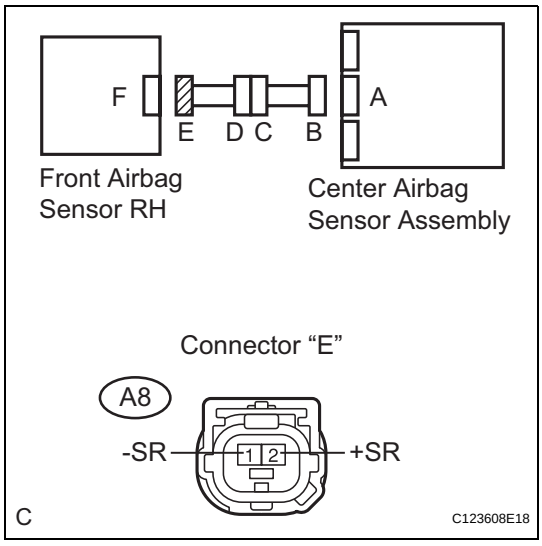

(a) Connect the negative (-) terminal cable to the battery, and wait for at least 2 seconds.
(b) Turn the ignition switch to the ON position.
(c) Measure the voltage according to the value(s) in the table below.

Standard voltage

Tester connection	Condition	Specified condition
A8-2 (+SR) - Body ground	Ignition switch ON	Below 1 V
A8-1 (-SR) - Body ground	Ignition switch ON	Below 1 V

NG → **Go to step 9**

OK

3 CHECK FRONT AIRBAG SENSOR RH CIRCUIT (SHORT)

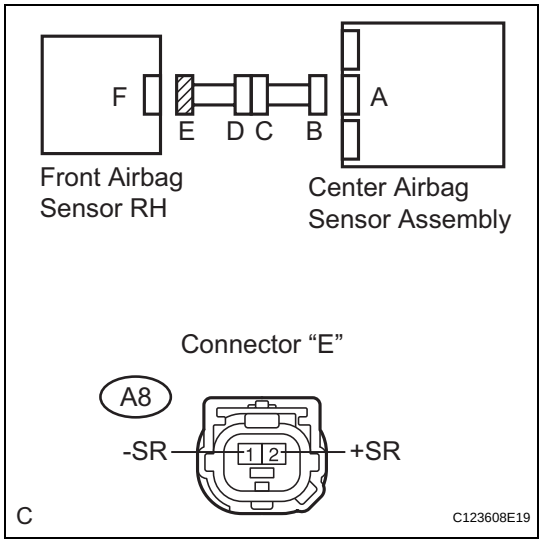

(a) Turn the ignition switch to the LOCK position.
(b) Disconnect the negative (-) terminal cable from the battery, and wait for at least 90 seconds.
(c) Measure the resistance according to the value(s) in the table below.

Standard resistance

Tester connection	Condition	Specified condition
A8-2 (+SR) - A8-1 (-SR)	Always	1 MΩ or higher

RS

NG → **Go to step 10**

OK

4 CHECK FRONT AIRBAG SENSOR LH CIRCUIT (SHORT TO GROUND)

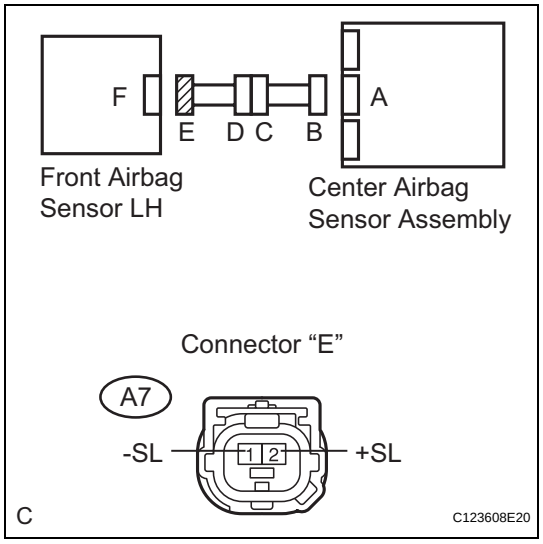

(a) Disconnect the connector from the front airbag sensor LH.
(b) Measure the resistance according to the value(s) in the table below.

Standard resistance

Tester connection	Condition	Specified condition
A7-2 (+SL) - Body ground	Always	1 MΩ or higher
A7-1 (-SL) - Body ground	Always	1 MΩ or higher

NG → **Go to step 11**

OK

5 CHECK FRONT AIRBAG SENSOR LH CIRCUIT (SHORT TO B+)

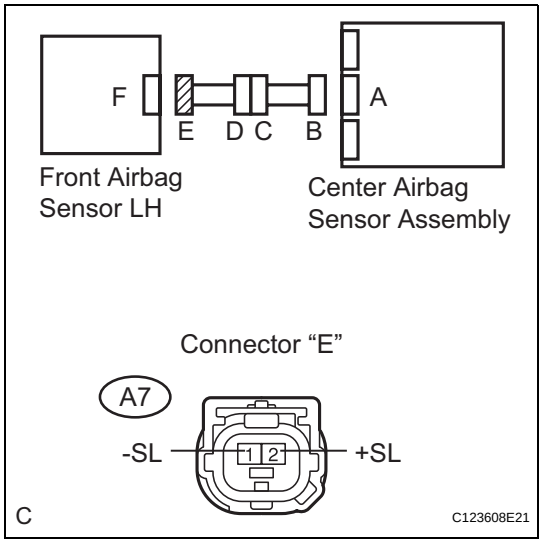

(a) Connect the negative (-) terminal cable to the battery, and wait for at least 2 seconds.
(b) Turn the ignition switch to the ON position.
(c) Measure the voltage according to the value(s) in the table below.

Standard voltage

Tester connection	Condition	Specified condition
A7-2 (+SL) - Body ground	Always	Below 1 V
A7-1 (-SL) - Body ground	Always	Below 1 V

NG → **Go to step 12**

OK

6 CHECK FRONT AIRBAG SENSOR LH CIRCUIT (SHORT)

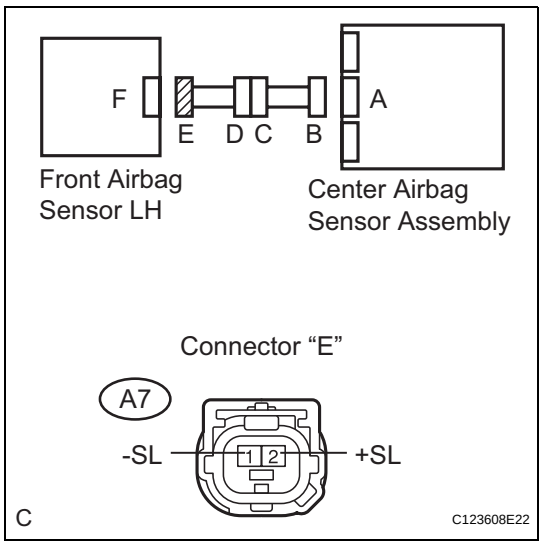

(a) Turn the ignition switch to the LOCK position.
(b) Disconnect the negative (-) terminal cable from the battery, and wait for at least 90 seconds.
(c) Measure the resistance according to the value(s) in the table below.

Standard resistance

Tester connection	Condition	Specified condition
A7-2 (+SL) - A7-1 (-SL)	Always	1 MΩ or higher

NG → **Go to step 13**

OK

7 CHECK CENTER AIRBAG SENSOR ASSEMBLY

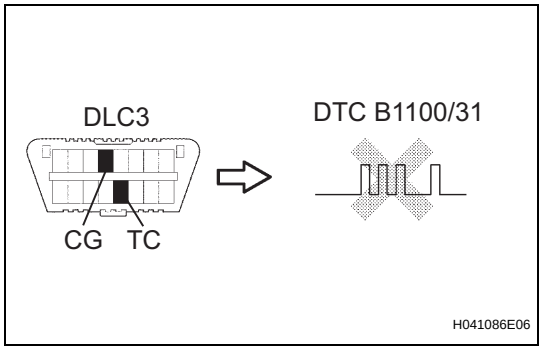

(a) Connect the connectors to the center airbag sensor assembly, front airbag sensors RH and LH.
(b) Connect the negative (-) terminal cable to the battery, and wait for at least 2 seconds.
(c) Turn the ignition switch to the ON position, and wait for at least 60 seconds.
(d) Clear the DTCs stored in memory (See page RS-35).
(e) Turn the ignition switch to the LOCK position.
(f) Turn the ignition switch to the ON position, and wait for at least 60 seconds.
(g) Check the DTCs (See page RS-35).
OK:
DTC B1100/31 is not output.

RS

NG → **REPLACE CENTER AIRBAG SENSOR ASSEMBLY**

OK

USE SIMULATION METHOD TO CHECK

8 CHECK ENGINE ROOM MAIN WIRE (SHORT TO GROUND)

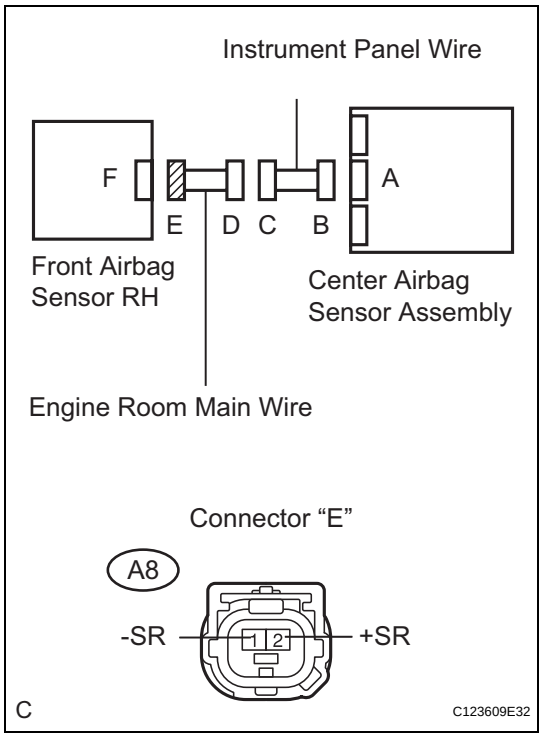

(a) Disconnect the engine room main wire connector from the instrument panel wire.
(b) Measure the resistance according to the value(s) in the table below.
Standard resistance

Tester connection	Condition	Specified condition
A8-2 (+SR) - Body ground	Always	1 MΩ or higher
A8-1 (-SR) - Body ground	Always	1 MΩ or higher

NG → **REPAIR OR REPLACE ENGINE ROOM MAIN WIRE**

OK

REPAIR OR REPLACE INSTRUMENT PANEL WIRE

9	CHECK ENGINE ROOM MAIN WIRE (SHORT TO B+)

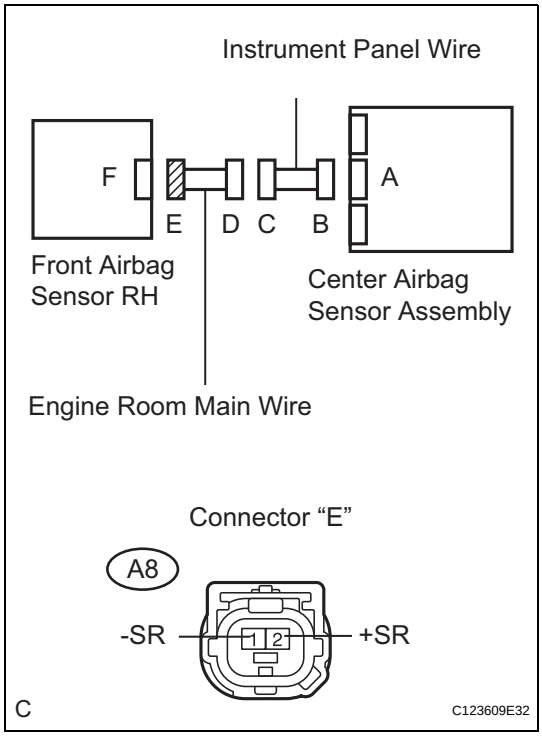

(a) Turn the ignition switch to the LOCK position.
(b) Disconnect the negative (-) terminal cable from the battery, and wait for at least 90 seconds.
(c) Disconnect the engine room main wire connector from the instrument panel wire.
(d) Connect the negative (-) terminal cable to the battery, and wait for at least 2 seconds.
(e) Turn the ignition switch to the ON position.
(f) Measure the voltage according to the value(s) in the table below.

Standard voltage

Tester connection	Condition	Specified condition
A8-2 (+SR) - Body ground	Ignition switch ON	Below 1 V
A8-1 (-SR) - Body ground	Ignition switch ON	Below 1 V

NG → **REPAIR OR REPLACE ENGINE ROOM MAIN WIRE**

OK

REPAIR OR REPLACE INSTRUMENT PANEL WIRE

10 CHECK ENGINE ROOM MAIN WIRE (SHORT)

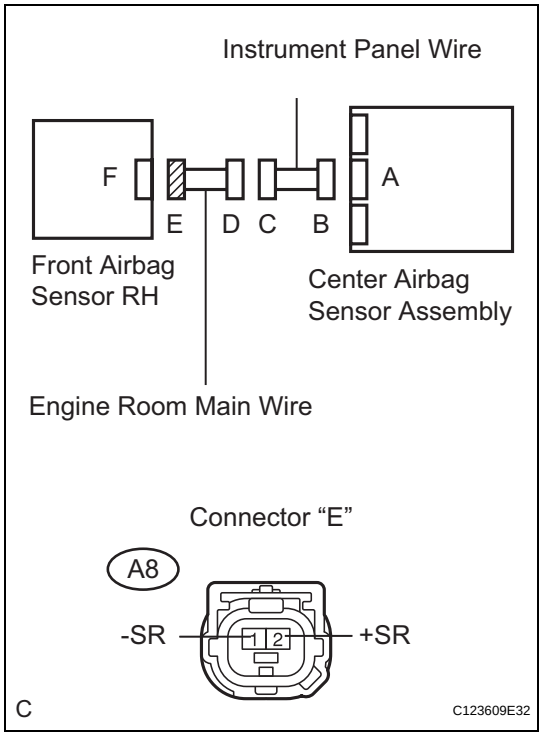

(a) Disconnect the engine room main wire connector from the instrument panel wire.
(b) Measure the resistance according to the value(s) in the table below.

Standard resistance

Tester connection	Condition	Specified condition
A8-2 (+SR) - A8-1 (-SR)	Always	1 MΩ or higher

RS

NG → **REPAIR OR REPLACE ENGINE ROOM MAIN WIRE**

OK

REPAIR OR REPLACE INSTRUMENT PANEL WIRE

11	CHECK ENGINE ROOM MAIN WIRE (SHORT TO GROUND)

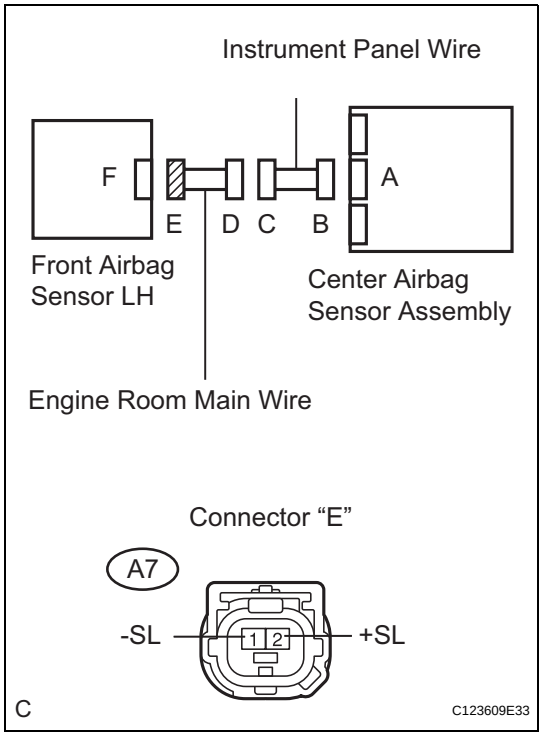

(a) Disconnect the engine room main wire connector from the instrument panel wire.

(b) Measure the resistance according to the value(s) in the table below.

Standard resistance

Tester connection	Condition	Specified condition
A7-2 (+SL) - Body ground	Always	1 MΩ or higher
A7-1 (-SL) - Body ground	Always	1 MΩ or higher

NG → **REPAIR OR REPLACE ENGINE ROOM MAIN WIRE**

OK

REPAIR OR REPLACE INSTRUMENT PANEL WIRE

12	CHECK ENGINE ROOM MAIN WIRE (SHORT TO B+)

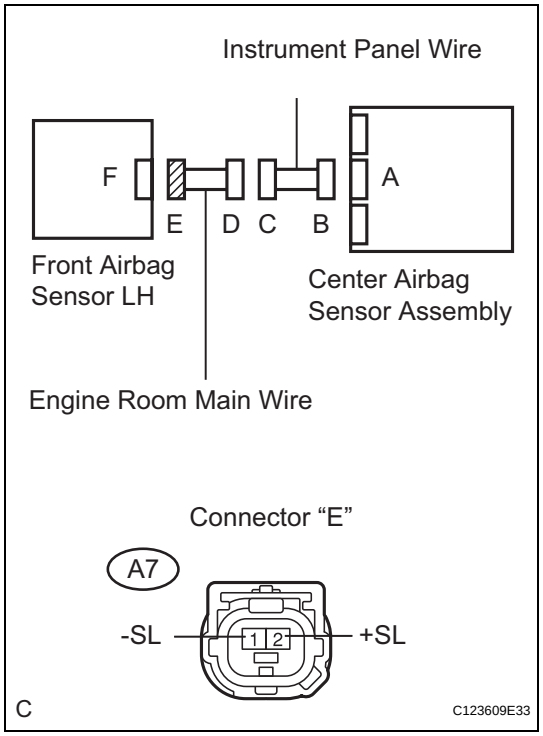

(a) Turn the ignition switch to the LOCK position.
(b) Disconnect the negative (-) terminal cable from the battery, and wait for at least 90 seconds.
(c) Disconnect the engine room main wire connector from the instrument panel wire.
(d) Connect the negative (-) terminal cable to the battery, and wait for at least 2 seconds.
(e) Turn the ignition switch to the ON position.
(f) Measure the voltage according to the value(s) in the table below.

Standard voltage

Tester connection	Condition	Specified condition
A7-2 (+SL) - Body ground	Ignition switch ON	Below 1 V
A7-1 (-SL) - Body ground	Ignition switch ON	Below 1 V

NG → **REPAIR OR REPLACE ENGINE ROOM MAIN WIRE**

OK

REPAIR OR REPLACE INSTRUMENT PANEL WIRE

RS

13	CHECK ENGINE ROOM MAIN WIRE (SHORT)

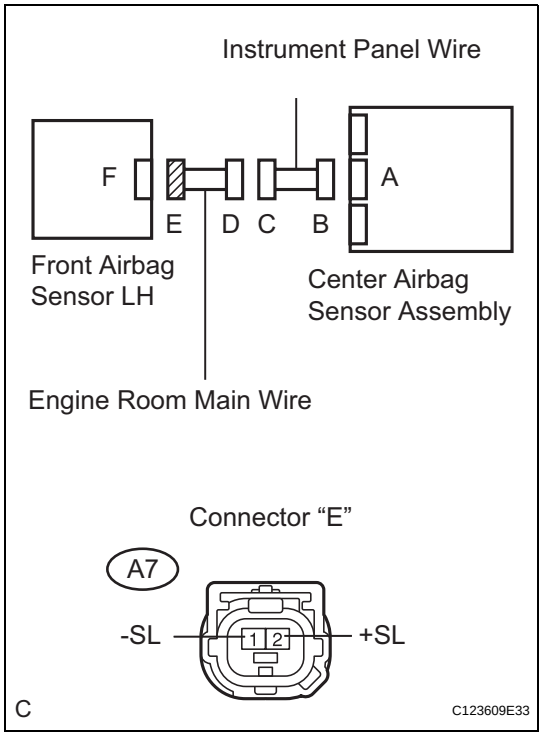

(a) Disconnect the engine room main wire connector from the instrument panel wire.
(b) Measure the resistance according to the value(s) in the table below.

Standard resistance

Tester connection	Condition	Specified condition
A7-2 (+SL) - A7-1 (-SL)	Always	1 MΩ or higher

NG → **REPAIR OR REPLACE ENGINE ROOM MAIN WIRE**

OK

REPAIR OR REPLACE INSTRUMENT PANEL WIRE