DTC	B1140/32	Side Airbag Sensor Assembly RH Circuit Malfunction

DESCRIPTION

The side airbag sensor RH circuit consists of the center airbag sensor assembly and side airbag sensor RH.

If the center airbag sensor assembly receives signals from the side airbag sensor RH, it judges whether or not the SRS should be activated.

DTC B1140/32 is recorded when a malfunction in the side airbag sensor RH circuit is detected.

DTC No.	DTC Detecting Condition	Trouble Area
B1140/32	• The center airbag sensor assembly receives a line short circuit signal, an open circuit signal, a short circuit to ground signal or a short circuit to B+ signal in the side airbag sensor RH circuit for 2 seconds. • Side airbag sensor RH malfunction • Center airbag sensor assembly malfunction	• Side airbag sensor RH • Center airbag sensor assembly • Floor wire No. 2

RS

WIRING DIAGRAM

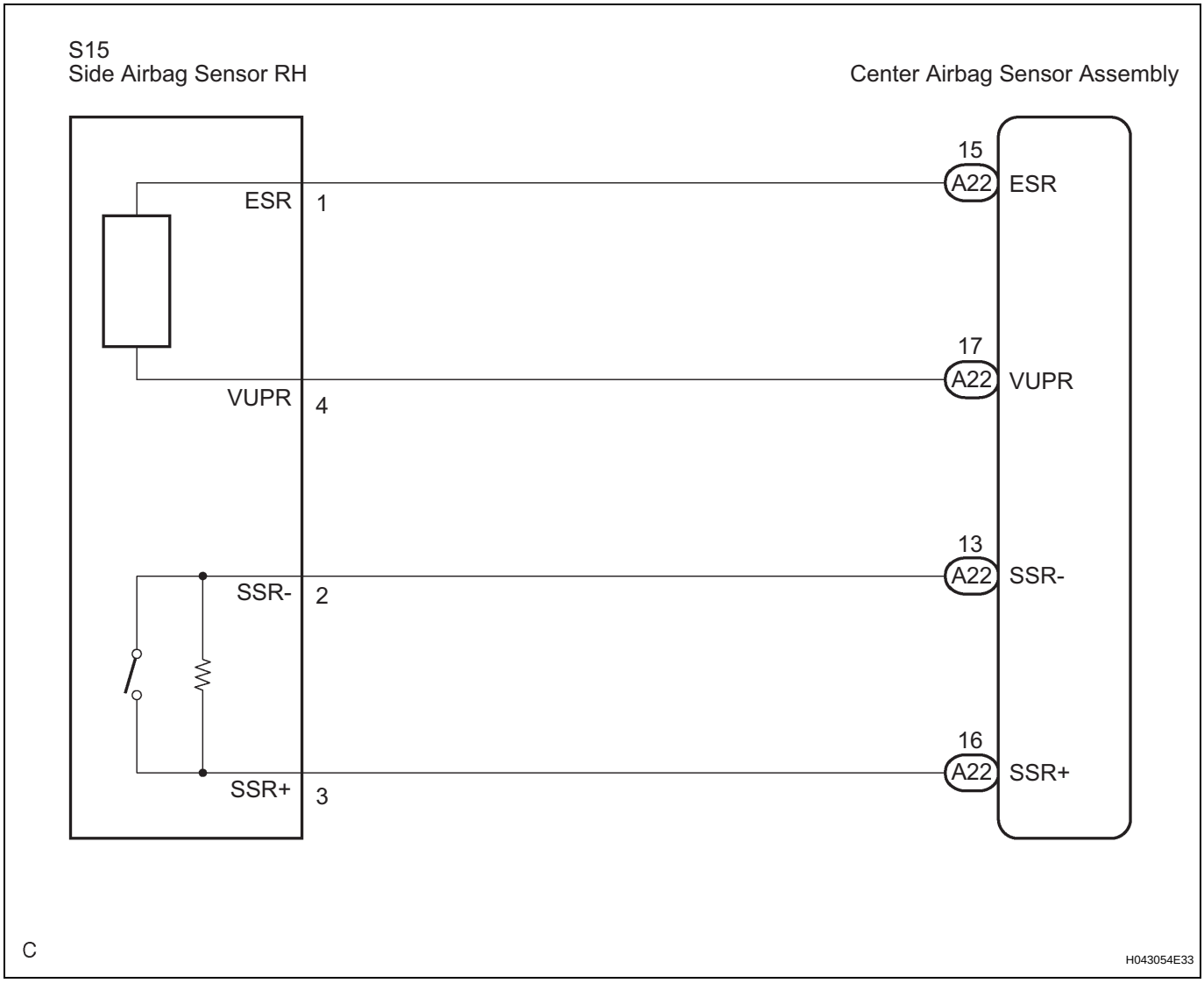

INSPECTION PROCEDURE

1	CHECK DTC

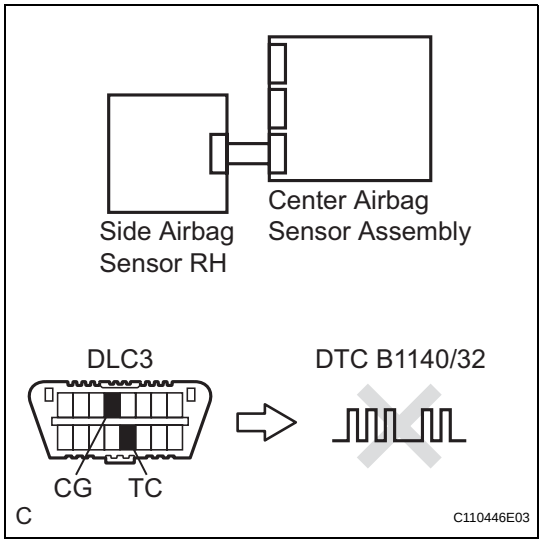

(a) Turn the ignition switch to the ON position, and wait for at least 60 seconds.
(b) Clear the DTCs stored in memory (See page RS-35).
(c) Turn the ignition switch to the LOCK position.
(d) Turn the ignition switch to the ON position, and wait for at least 60 seconds.
(e) Check the DTCs (See page RS-35).

OK:

DTC B1140/32 is not output.

HINT:

Codes other than DTC B1140/32 may be output at this time, but they are not related to this check.

NG → **Go to step 2**

OK

USE SIMULATION METHOD TO CHECK

2	CHECK CONNECTION OF CONNECTORS

(a) Turn the ignition switch to the LOCK position.
(b) Disconnect the negative (-) terminal cable from the battery, and wait for at least 90 seconds.
(c) Check that the connectors are properly connected to the center airbag sensor assembly and the side airbag sensor RH.

OK:

The connectors are connected.

NG → **CONNECT CONNECTORS**

OK

3	CHECK FLOOR WIRE NO. 2 (OPEN)

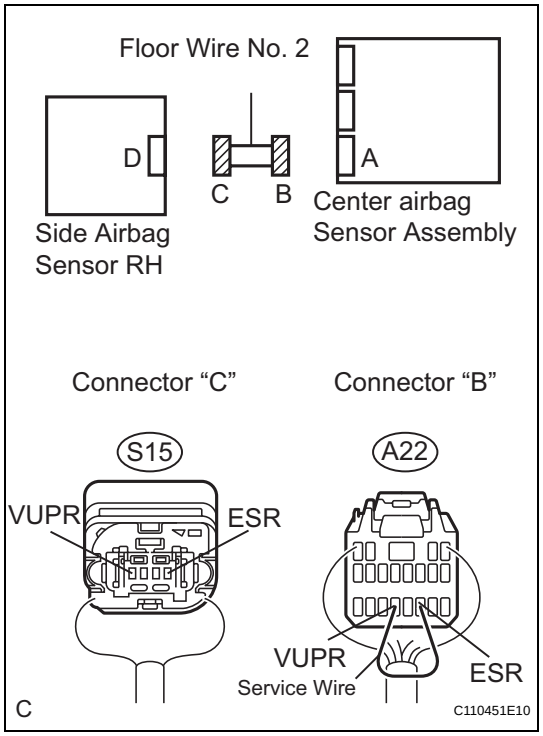

(a) Disconnect the connectors from the center airbag sensor assembly and the side airbag sensor RH.
(b) Using a service wire, connect A22-17 (VUPR) and A22-15 (ESR) of connector "B".
NOTICE:
Do not forcibly insert a service wire into the terminals of the connector when connecting.
(c) Measure the resistance according to the value(s) in the table below.
Standard resistance

Tester connection	Condition	Specified condition
S15-4 (VUPR) - S15-1 (ESR)	Always	Below 1 Ω

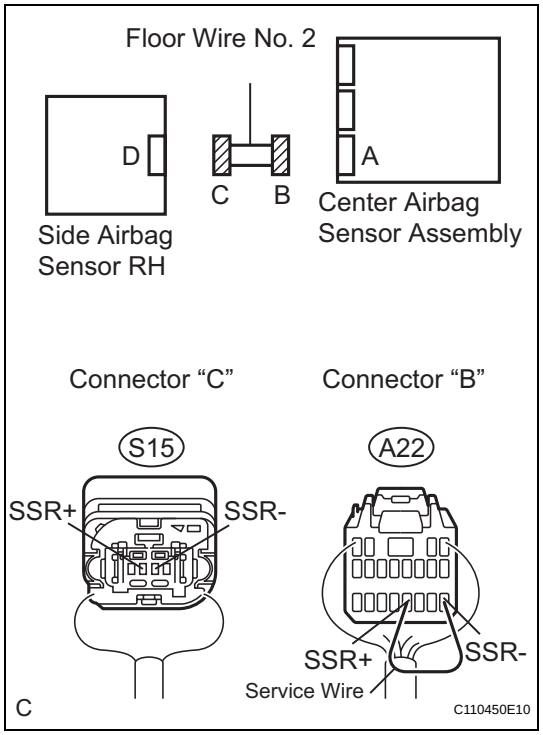

(d) Using a service wire, connect A22-16 (SSR+) and A22-13 (SSR-) of connector "B".
NOTICE:
Do not forcibly insert a service wire into the terminals of the connector when connecting.
(e) Measure the resistance according to the value(s) in the table below.
Standard resistance

Tester connection	Condition	Specified condition
S15-3 (SSR+) - S15-2 (SSR-)	Always	Below 1 Ω

NG → **REPAIR OR REPLACE FLOOR WIRE NO. 2**

OK

RS

4 CHECK FLOOR WIRE NO. 2 (SHORT TO B+)

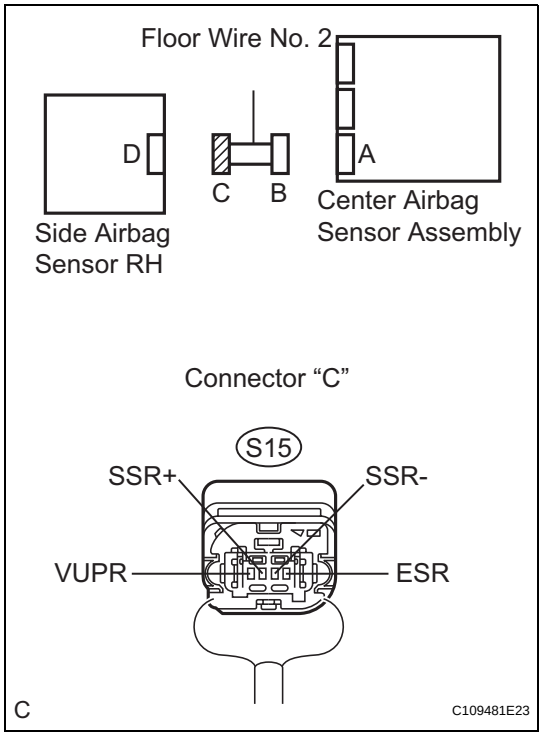

(a) Disconnect the service wire from connector "B".
(b) Connect the negative (-) terminal cable to the battery, and wait for at least 2 seconds.
(c) Turn the ignition switch to the ON position.
(d) Measure the voltage according to the value(s) in the table below.

Standard voltage

Tester connection	Condition	Specified condition
S15-4 (VUPR) - Body ground	Ignition switch ON	Below 1 V
S15-1 (ESR) - Body ground	Ignition switch ON	Below 1 V
S15-3 (SSR+) - Body ground	Ignition switch ON	Below 1 V
S15-2 (SSR-) - Body ground	Ignition switch ON	Below 1 V

NG → REPAIR OR REPLACE FLOOR WIRE NO. 2

OK

5 CHECK FLOOR WIRE NO. 2 (SHORT TO GROUND)

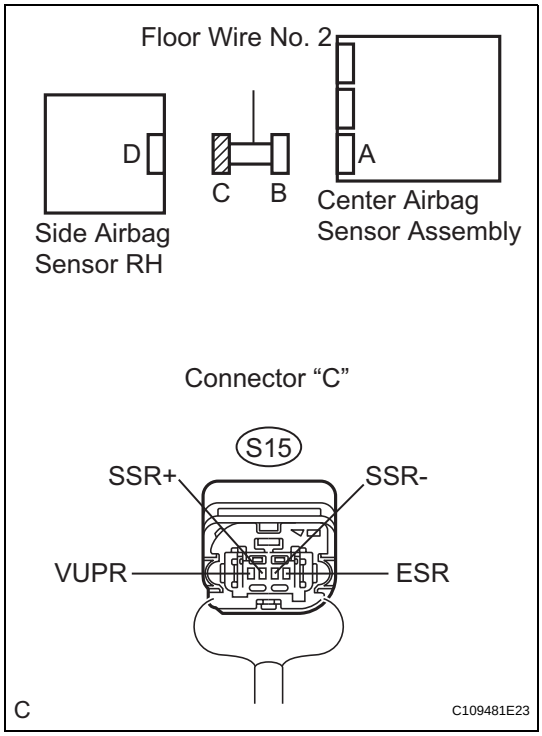

(a) Turn the ignition switch to the LOCK position.
(b) Disconnect the negative (-) terminal cable from the battery, and wait for at least 90 seconds.
(c) Measure the resistance according to the value(s) in the table below.

Standard resistance

Tester connection	Condition	Specified condition
S15-4 (VUPR) - Body ground	Always	1 MΩ or higher
S15-1 (ESR) - Body ground	Always	1 MΩ or higher
S15-3 (SSR+) - Body ground	Always	1 MΩ or higher
S15-2 (SSR-) - Body ground	Always	1 MΩ or higher

NG → REPAIR OR REPLACE FLOOR WIRE NO. 2

OK

6 CHECK FLOOR WIRE NO. 2 (SHORT)

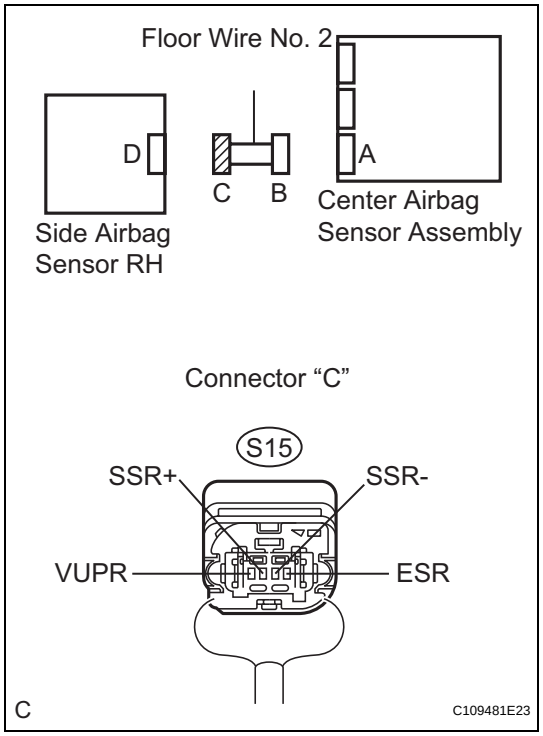

(a) Measure the resistance according to the value(s) in the table below.

Standard resistance

Tester connection	Condition	Specified condition
S15-4 (VUPR) - S15-1 (ESR)	Always	1 MΩ or Higher
S15-3 (SSR+) - S15-2 (SSR-)	Always	1 MΩ or Higher

RS

NG → REPAIR OR REPLACE FLOOR WIRE NO. 2

OK

7 CHECK SIDE AIRBAG SENSOR RH

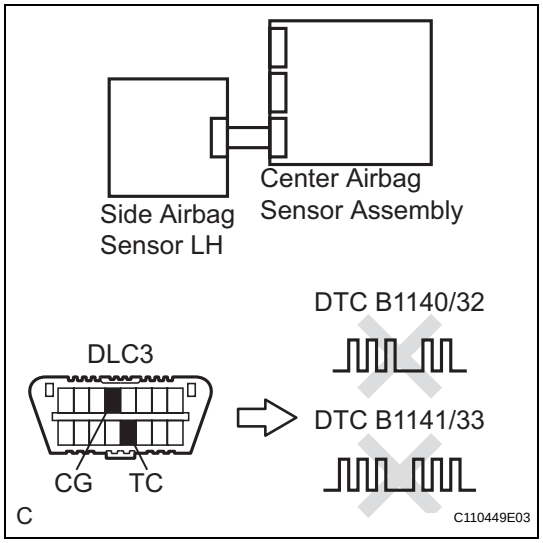

(a) Connect the connector to the center airbag sensor assembly.
(b) Interchange the side airbag sensor RH with LH and connect the connectors to them.
(c) Connect the negative (-) terminal cable to the battery, and wait for at least 2 seconds.
(d) Turn the ignition switch to the ON position, and wait for at least 60 seconds.
(e) Clear the DTCs stored in memory (See page RS-35).
(f) Turn the ignition switch to the LOCK position.
(g) Turn the ignition switch to the ON position, and wait for at least 60 seconds.
(h) Check the DTCs (See page RS-35).

Result

Result	Proceed to
DTC B1140/32 and B1141/33 are not output.	A
DTC B1140/32 is output.	B
DTC B1141/33 is output.	C

HINT:
Codes other than DTC B1140/32 and B1141/33 may be output at this time, but they are not related to this check.

B → REPLACE CENTER AIRBAG SENSOR ASSEMBLY

C → REPLACE SIDE AIRBAG SENSOR RH

A

USE SIMULATION METHOD TO CHECK