DTC	B1150/23	Occupant Classification System Malfunction

DESCRIPTION

The occupant classification system circuit consists of the center airbag sensor assembly and the occupant classification ECU.

If the center airbag sensor assembly receives signals from the occupant classification ECU, it determines whether or not the front passenger airbag, the front seat side airbag RH, and front seat belt pretensioner RH should be operated.

DTC B1150/23 is recorded when a malfunction is detected in the occupant classification system circuit.

DTC No.	DTC Detecting Condition	Trouble Area
B1150/23	• The center airbag sensor assembly receives a line short signal, open signal, short to ground signal or B+ short signal in the occupant classification system circuit for 2 seconds. • Occupant classification ECU malfunction • Center airbag sensor assembly malfunction	• Occupant classification ECU • Center airbag sensor assembly • Floor wire No. 2 • Front seat wire RH

RS

WIRING DIAGRAM

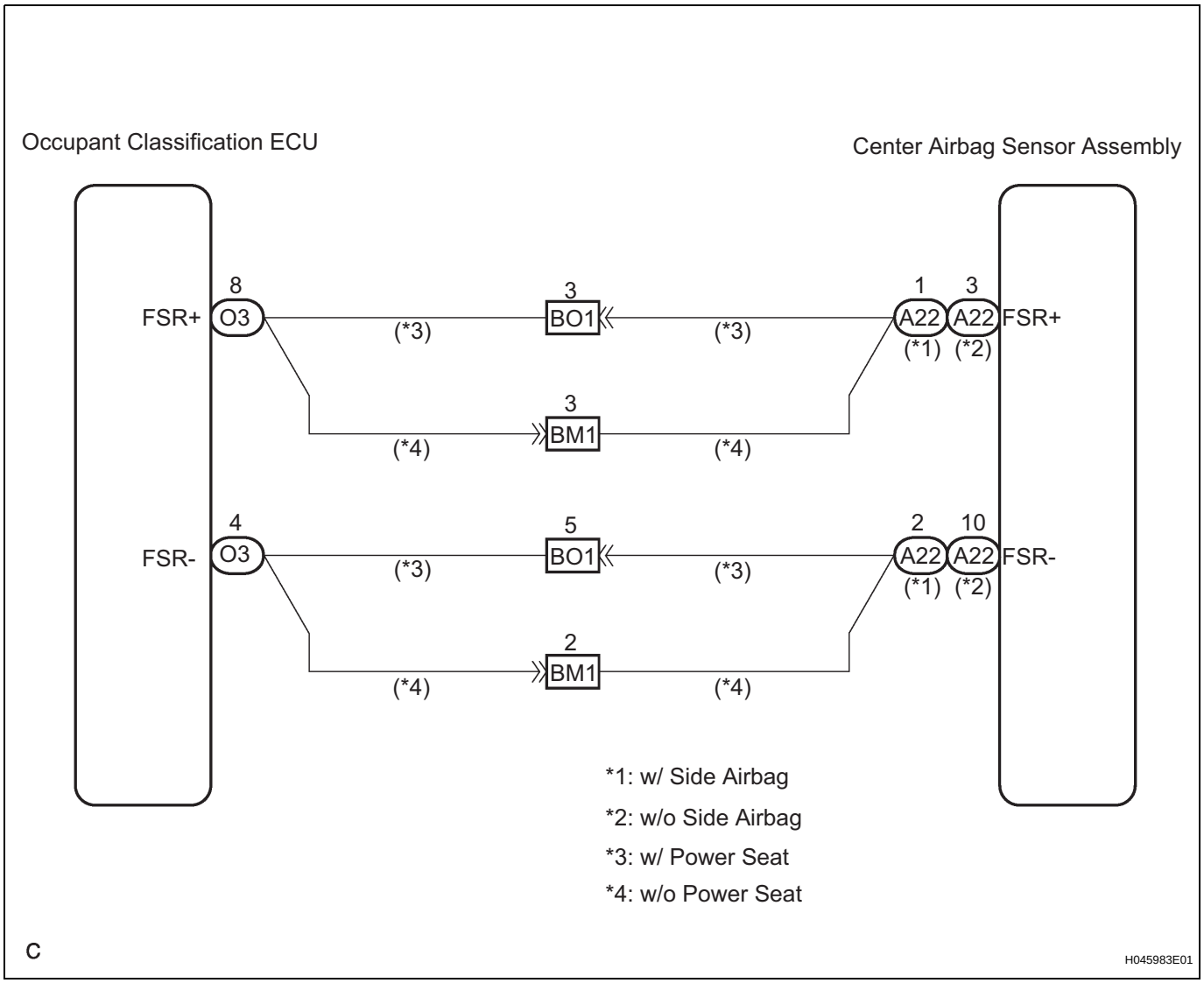

INSPECTION PROCEDURE

1	CHECK DTC (OCCUPANT CLASSIFICATION ECU)

(a) Turn the ignition switch to the ON position, and wait for at least 10 seconds.
(b) Using the intelligent tester, check the DTCs of the occupant classification ECU (See page RS-335).
OK:
DTC is not output.

NG → **GO TO INSPECTION PROCEDURE OF DTC OUTPUT**

OK

2	CHECK DTC (CENTER AIRBAG SENSOR ASSEMBLY)

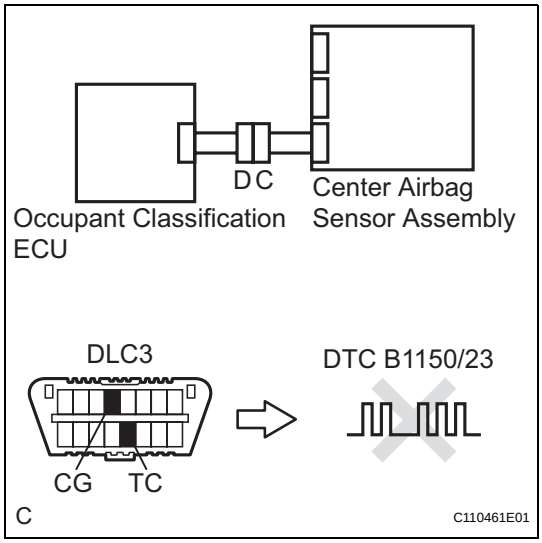

(a) Turn the ignition switch to the ON position, and wait for at least 60 seconds.
(b) Clear the DTCs stored in memory (See page RS-35).
(c) Turn the ignition switch to the LOCK position.
(d) Turn the ignition switch to the ON position, and wait for at least 60 seconds.
(e) Check the DTCs (See page RS-35).
OK:
DTC B1150/23 is not output.
HINT:
Codes other than code B1150/23 may be output at this time, but they are not related to this check.

NG → **Go to step 3**

OK

USE SIMULATION METHOD TO CHECK

3	CHECK CONNECTION OF CONNECTORS

(a) Turn the ignition switch to the LOCK position.
(b) Disconnect the negative (-) terminal cable from the battery, and wait for at least 90 seconds.
(c) Check that the connectors are properly connected to the center airbag sensor assembly and the occupant classification ECU.
OK:
The connectors are connected.

NG → **CONNECT CONNECTORS**

OK

4 CHECK OCCUPANT CLASSIFICATION ECU CIRCUIT (SHORT TO GROUND)

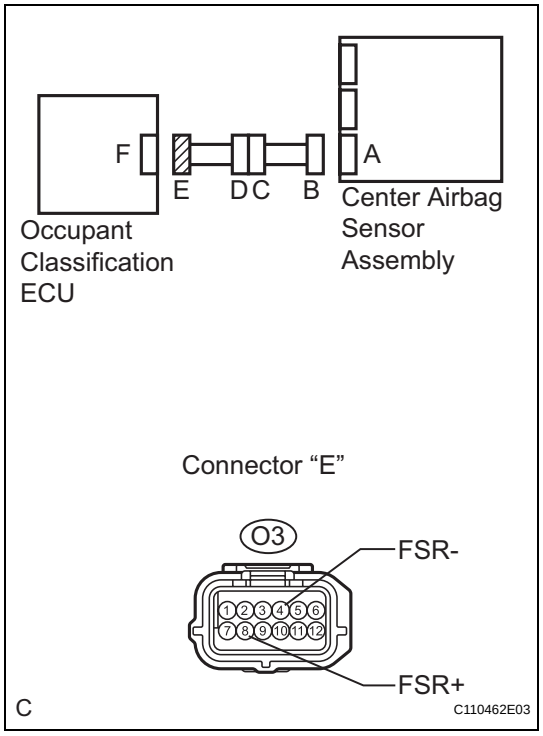

(a) Disconnect the connectors from the center airbag sensor assembly and the occupant classification ECU.
(b) Measure the resistance according to the value(s) in the table below.

Standard resistance

Tester connection	Condition	Specified condition
O3-8 (FSR+) - Body ground	Always	1 MΩ or higher
O3-4 (FSR-) - Body ground	Always	1 MΩ or higher

NG → **Go to step 8**

OK

5 CHECK OCCUPANT CLASSIFICATION ECU CIRCUIT (SHORT TO B+)

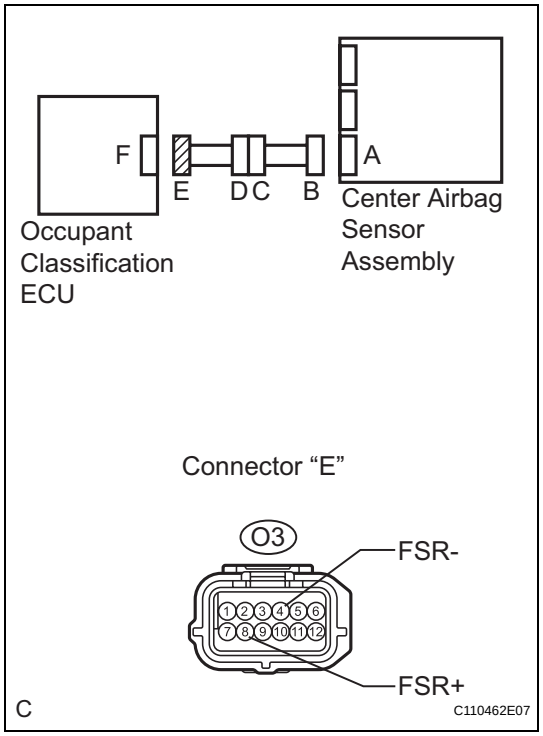

(a) Connect the negative (-) terminal cable to the battery, and wait for at least 2 seconds.
(b) Turn the ignition switch to the ON position.
(c) Measure the voltage according to the value(s) in the table below.

Standard voltage

Tester connection	Condition	Specified condition
O3-8 (FSR+) - Body ground	Ignition switch ON	Below 1 V
O3-4 (FSR-) - Body ground	Ignition switch ON	Below 1 V

NG → **Go to step 9**

RS

OK

6	CHECK OCCUPANT CLASSIFICATION ECU CIRCUIT (SHORT)

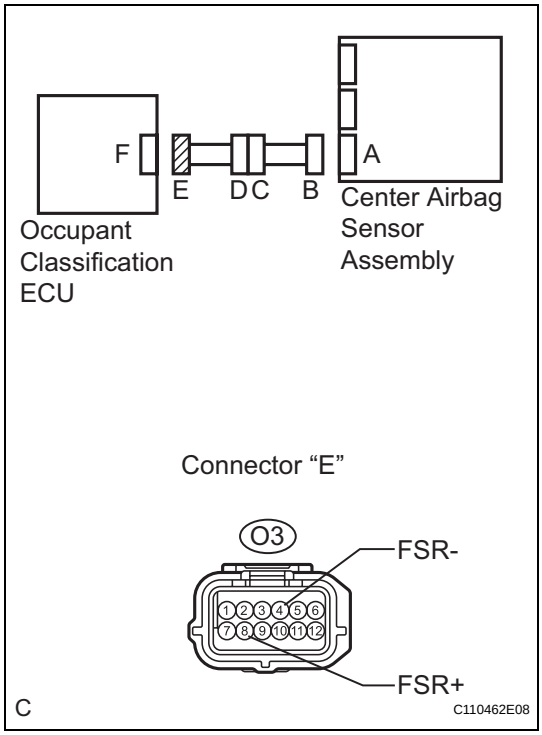

(a) Turn the ignition switch to the LOCK position.
(b) Disconnect the negative (-) terminal cable from the battery, and wait for at least 90 seconds.
(c) Measure the resistance according to the value(s) in the table below.

Standard resistance

Tester connection	Condition	Specified condition
O3-8 (FSR+) - O3-4 (FSR-)	Always	1 MΩ or higher

NG → **Go to step 10**

OK

RS

7	CHECK OCCUPANT CLASSIFICATION ECU CIRCUIT (OPEN)

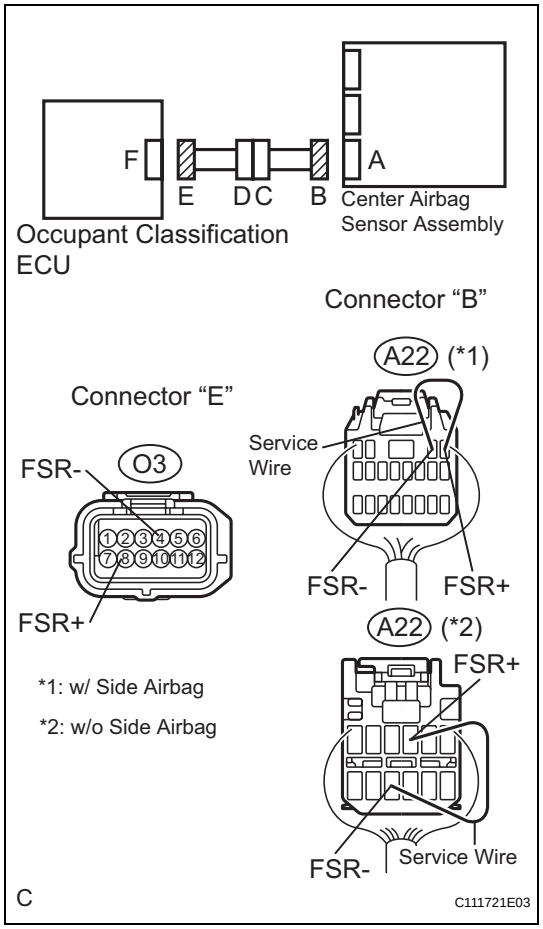

(a) w/ Side airbag:
Using a service wire, connect A22-1 (FSR+) and A22-2 (FSR-) of connector "B".
NOTICE:
Do not forcibly insert a service wire into the terminals of the connector when connecting.

(b) w/o Side airbag:
Using a service wire, connect A22-3 (FSR+) and A22-10 (FSR-) of connector "B".
NOTICE:
Do not forcibly insert a service wire into the terminals of the connector when connecting.

(c) Measure the resistance according to the value(s) in the table below.
Standard resistance

Tester connection	Condition	Specified condition
O3-8 (FSR+) - O3-4 (FSR-)	Always	Below 1 Ω

NG → **Go to step 11**

OK

RS

8	CHECK FRONT SEAT WIRE RH (SHORT TO GROUND)

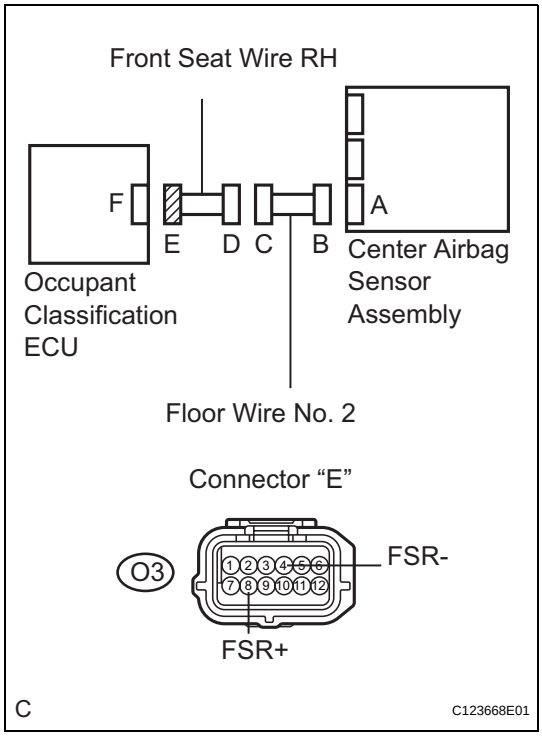

(a) Disconnect the front seat wire RH connector from the floor wire No. 2.
(b) Measure the resistance according to the value(s) in the table below.

Standard resistance

Tester connection	Condition	Specified condition
O3-8 (FSR+) - Body ground	Always	1 MΩ or higher
O3-4 (FSR-) - Body ground	Always	1 MΩ or higher

NG → **REPAIR OR REPLACE FRONT SEAT WIRE RH**

OK

REPAIR OR REPLACE FLOOR WIRE NO.2

9	CHECK FRONT SEAT WIRE RH (SHORT TO B+)

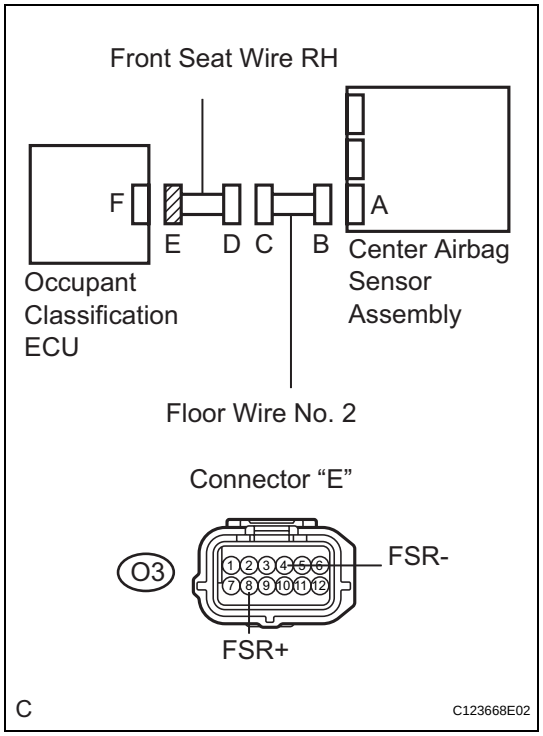

(a) Turn the ignition switch to the LOCK position.
(b) Disconnect the negative (-) terminal cable from the battery, and wait for at least 90 seconds.
(c) Disconnect the front seat wire RH connector from the floor wire No. 2.
(d) Connect the negative (-) terminal cable to the battery, and wait for at least 2 seconds.
(e) Turn the ignition switch to the ON position.
(f) Measure the voltage according to the value(s) in the table below.

Standard voltage

Tester connection	Condition	Specified condition
O3-8 (FSR+) - Body ground	Ignition switch ON	Below 1 V
O3-4 (FSR-) - Body ground	Ignition switch ON	Below 1 V

NG → **REPAIR OR REPLACE FRONT SEAT WIRE RH**

OK

REPAIR OR REPLACE FLOOR WIRE NO.2

RS

10	CHECK FRONT SEAT WIRE RH (SHORT)

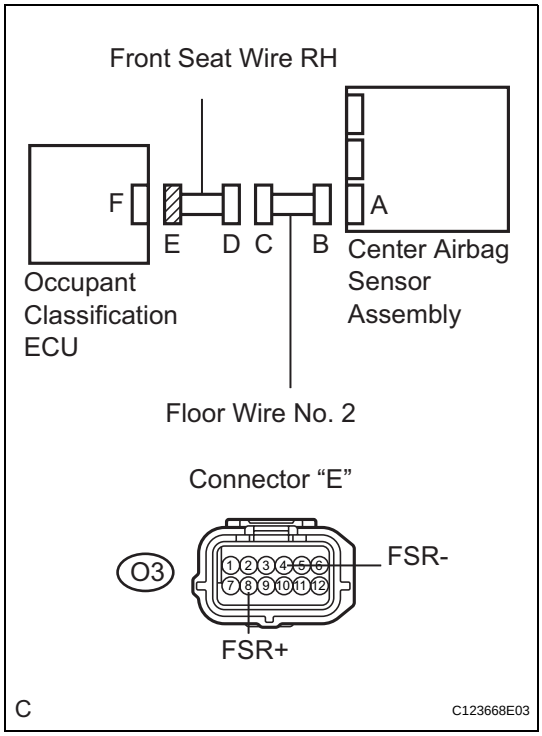

(a) Disconnect the front seat wire RH connector from the floor wire No. 2.
(b) Measure the resistance according to the value(s) in the table below.

Standard resistance

Tester connection	Condition	Specified condition
O3-8 (FSR+) - O3-4 (FSR-)	Always	1 MΩ or higher

NG → **REPAIR OR REPLACE FRONT SEAT WIRE RH**

OK

REPAIR OR REPLACE FLOOR WIRE NO.2

11	CHECK FRONT SEAT WIRE RH (OPEN)

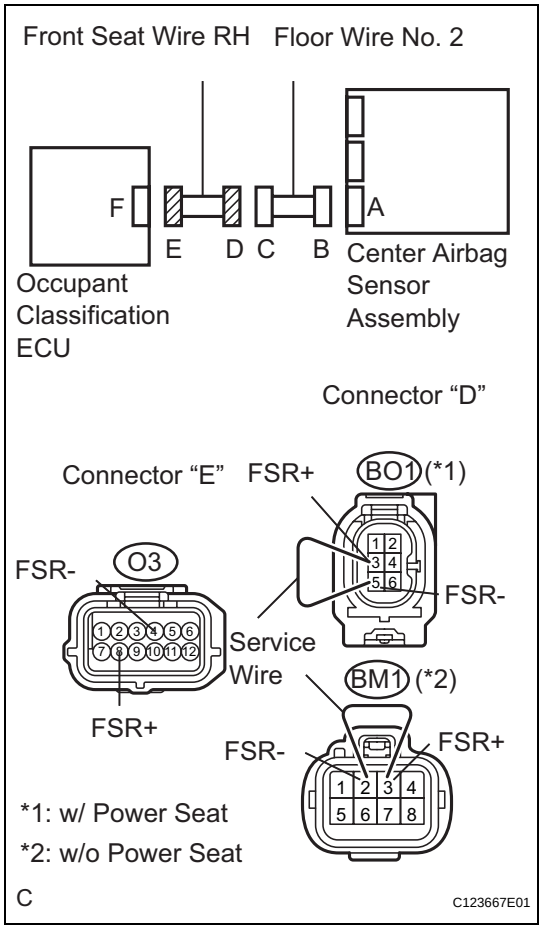

(a) Disconnect the service wire from connector "B".
(b) Disconnect the front seat wire RH connector from the floor wire No. 2.
(c) w/ Power seat:
Using a service wire, connect BO1-3 (FSR+) and BO1-5 (FSR-) of connector "D".
NOTICE:
Do not forcibly insert a service wire into the terminals of the connector when connecting.
(d) w/o Power seat:
Using a service wire, connect BM1-3 (FSR+) and BM1-2 (FSR-) of connector "D".
NOTICE:
Do not forcibly insert a service wire into the terminals of the connector when connecting.
(e) Measure the resistance according to the value(s) in the table below.
Standard resistance

Tester connection	Condition	Specified condition
O3-8 (FSR+) - O3-4 (FSR-)	Always	Below 1 Ω

NG → **REPAIR OR REPLACE FRONT SEAT WIRE RH**

OK

REPAIR OR REPLACE FLOOR WIRE NO.2

RS