| DTC | B1154/38 | Rear Airbag Sensor RH Circuit Malfunction |
|---|---|---|

## DESCRIPTION

The rear airbag sensor RH circuit consists of the center airbag sensor assembly and rear airbag sensor RH.

If the center airbag sensor assembly receives signals from the rear airbag sensor RH, it judges whether or not the SRS should be activated.

DTC B1154/38 is recorded when a malfunction is detected in the rear airbag sensor RH circuit.

| DTC No. | DTC Detecting Condition | Trouble Area |
|---|---|---|
| B1154/38 | • The center airbag sensor assembly receives a line short circuit signal, an open circuit signal, a short circuit to ground signal or a short circuit to B+ signal in the rear airbag sensor RH circuit for 2 seconds.<br>• Rear airbag sensor RH malfunction<br>• Center airbag sensor assembly malfunction | • Rear airbag sensor RH<br>• Center airbag sensor assembly<br>• Floor wire No. 2 |

RS

## WIRING DIAGRAM

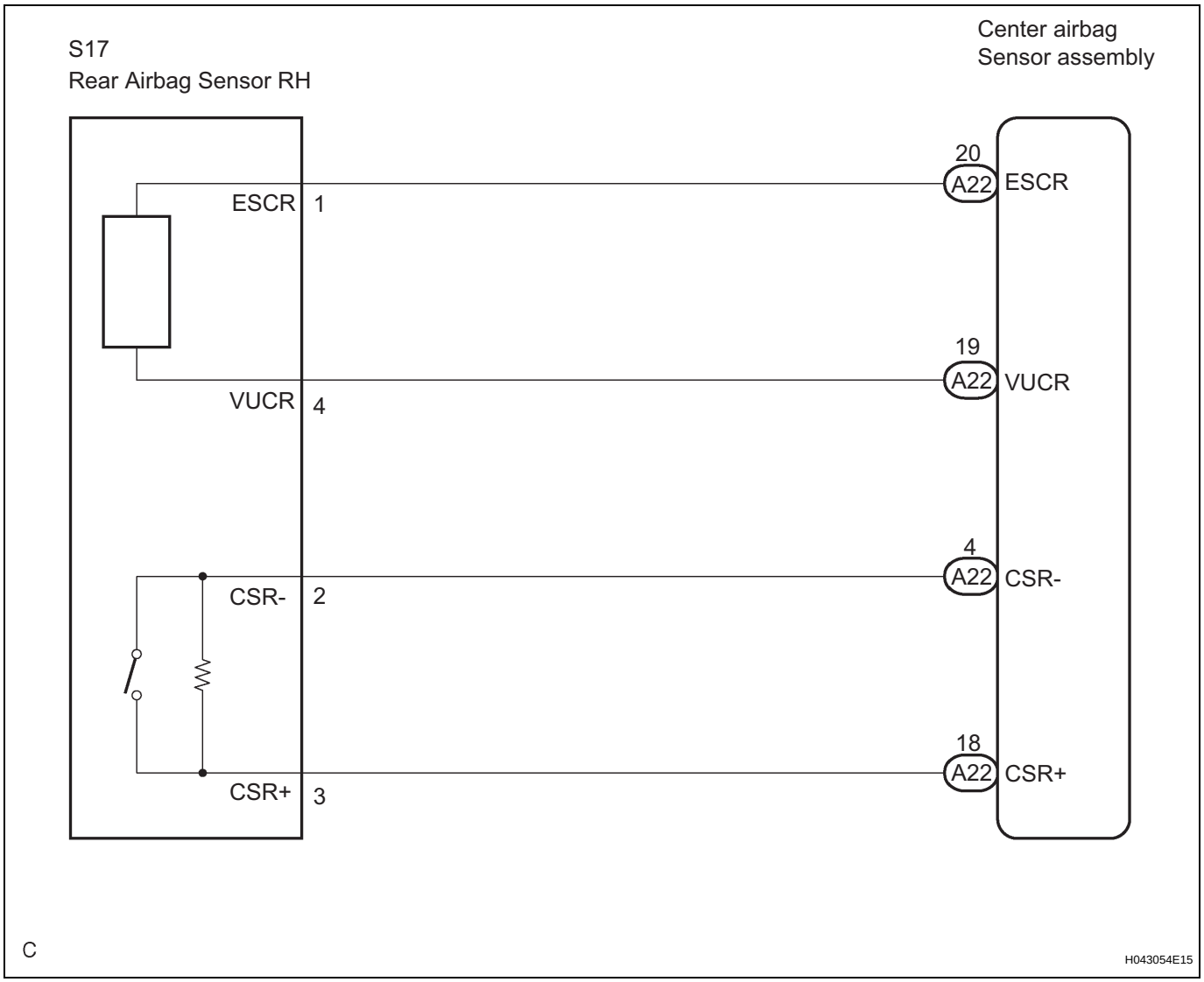

## INSPECTION PROCEDURE

| 1 | CHECK DTC |
|---|---|

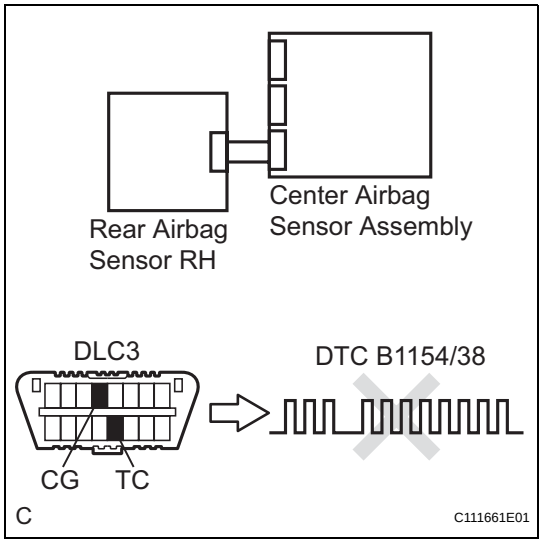


(a) Turn the ignition switch to the ON position, and wait for at least 60 seconds.
(b) Clear the DTCs stored in memory (See page RS-35).
(c) Turn the ignition switch to the LOCK position.
(d) Turn the ignition switch to the ON position, and wait for at least 60 seconds.
(e) Check the DTCs (See page RS-35).

**OK:**

**DTC B1154/38 is not output.**

HINT:

Codes other than code B1154/38 may be output at this time, but they are not related to this check.

NG → **Go to step 2**

OK

**USE SIMULATION METHOD TO CHECK**

| 2 | CHECK CONNECTION OF CONNECTORS |
|---|---|

(a) Turn the ignition switch to the LOCK position.
(b) Disconnect the negative (-) terminal cable from the battery, and wait for at least 90 seconds.
(c) Check that the connectors are properly connected to the center airbag sensor assembly and the rear airbag sensor RH.

**OK:**

**The connectors are connected.**

NG → **CONNECT CONNECTORS**

OK

| 3 | CHECK FLOOR WIRE NO. 2 (OPEN) |
|---|---|

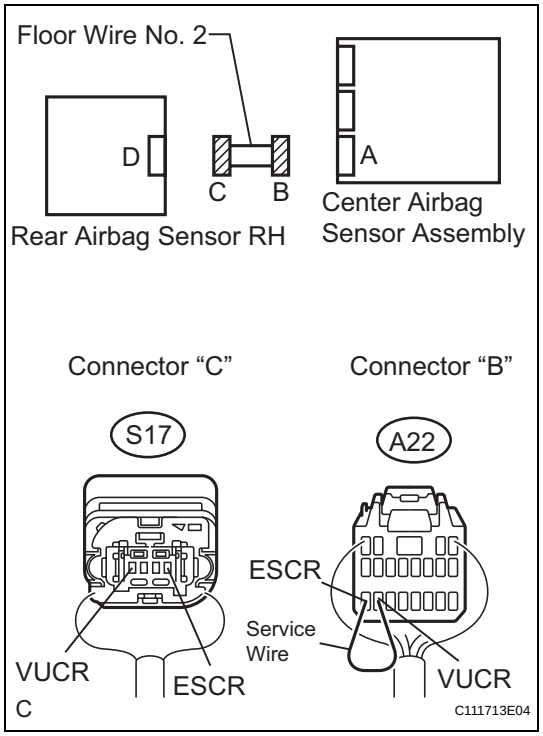


(a) Disconnect the connectors from the center airbag sensor assembly and the rear airbag sensor RH.
(b) Using a service wire, connect A22-19 (VUCR) and A22-20 (ESCR) of connector "B".
**NOTICE:**
**Do not forcibly insert a service wire into the terminals of the connector when connecting.**
(c) Measure the resistance according to the value(s) in the table below.
**Standard resistance**

| Tester connection | Condition | Specified condition |
|---|---|---|
| S17-4 (VUCR) - S17-1 (ESCR) | Always | Below 1 Ω |

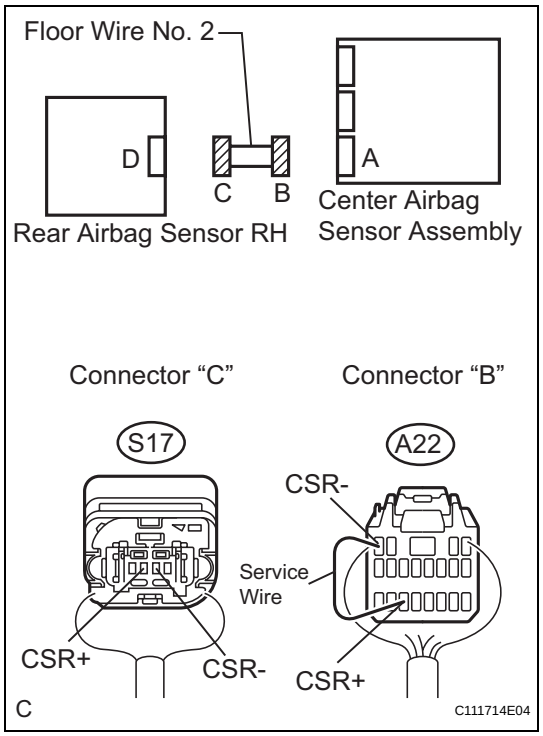


(d) Using a service wire, connect A22-18 (CSR+) and A22-4 (CSR-) of connector "B".
**NOTICE:**
**Do not forcibly insert a service wire into the terminals of the connector when connecting.**
(e) Measure the resistance according to the value(s) in the table below.
**Standard resistance**

| Tester connection | Condition | Specified condition |
|---|---|---|
| S17-3 (CSR+) - S17-2 (CSR-) | Always | Below 1 Ω |

NG → **REPAIR OR REPLACE FLOOR WIRE NO. 2**

OK

RS

## 4 CHECK FLOOR WIRE NO. 2 (SHORT TO B+)

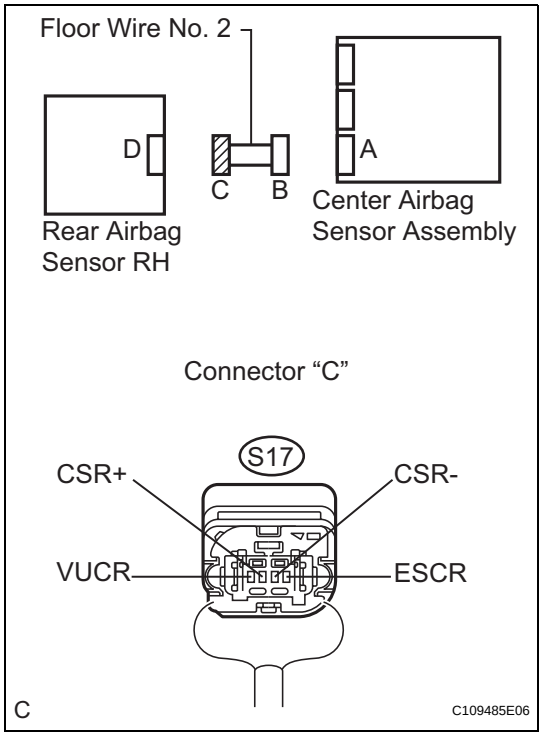


(a) Disconnect the service wire from connector "B".
(b) Connect the negative (-) terminal cable to the battery, and wait for at least 2 seconds.
(c) Turn the ignition switch to the ON position.
(d) Measure the voltage according to the value(s) in the table below.

**Standard voltage**

| Tester connection | Condition | Specified condition |
|---|---|---|
| S17-4 (VUCR) - Body ground | Ignition switch ON | Below 1 V |
| S17-1 (ESCR) - Body ground | Ignition switch ON | Below 1 V |
| S17-3 (CSR+) - Body ground | Ignition switch ON | Below 1 V |
| S17-2 (CSR-) - Body ground | Ignition switch ON | Below 1 V |

NG → REPAIR OR REPLACE FLOOR WIRE NO. 2

OK

## 5 CHECK FLOOR WIRE NO. 2 (SHORT TO GROUND)

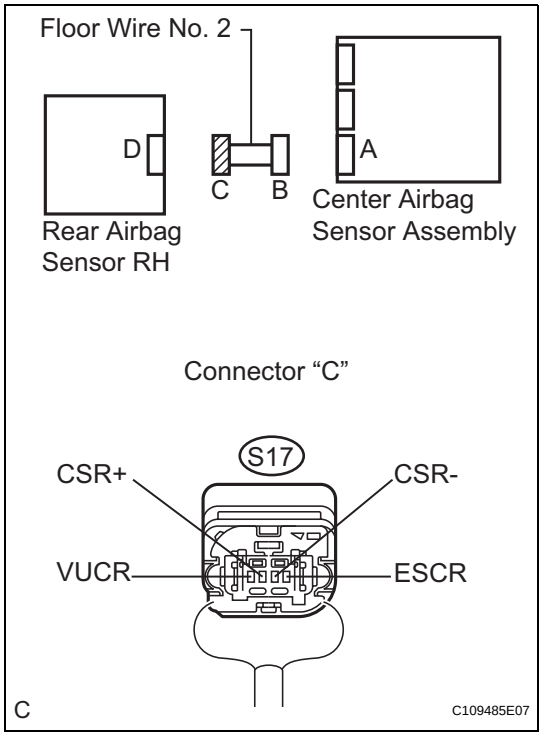


(a) Turn the ignition switch to the LOCK position.
(b) Disconnect the negative (-) terminal cable from the battery, and wait for at least 90 seconds.
(c) Measure the resistance according to the value(s) in the table below.

**Standard resistance**

| Tester connection | Condition | Specified condition |
|---|---|---|
| S17-4 (VUCR) - Body ground | Always | 1 MΩ or higher |
| S17-1 (ESCR) - Body ground | Always | 1 MΩ or higher |
| S17-3 (CSR+) - Body ground | Always | 1 MΩ or higher |
| S17-2 (CSR-) - Body ground | Always | 1 MΩ or higher |

NG → REPAIR OR REPLACE FLOOR WIRE NO. 2

OK

## 6 CHECK FLOOR WIRE NO. 2 (SHORT)

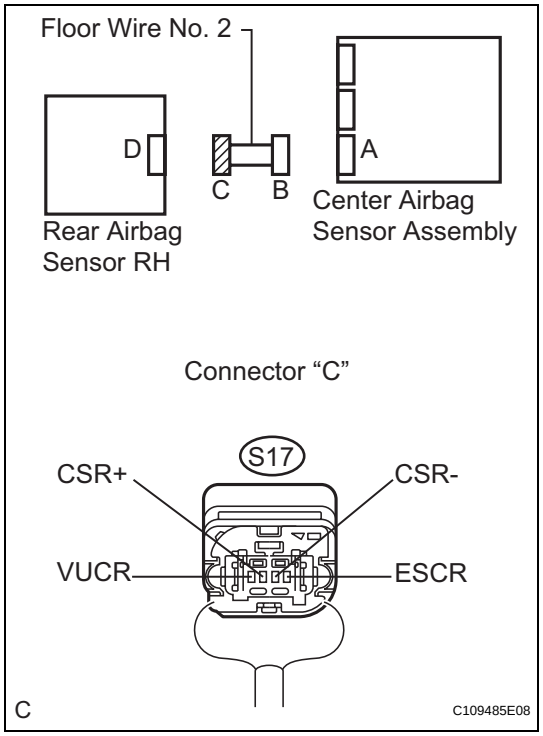


(a) Measure the resistance according to the value(s) in the table below.

**Standard resistance**

| Tester connection | Condition | Specified condition |
|---|---|---|
| S17-4 (VUCR) - S17-1 (ESCR) | Always | 1 MΩ or higher |
| S17-3 (CSR+) - S17-2 (CSR-) | Always | 1 MΩ or higher |

RS

NG → REPAIR OR REPLACE FLOOR WIRE NO. 2

OK

## 7 CHECK REAR AIRBAG SENSOR RH

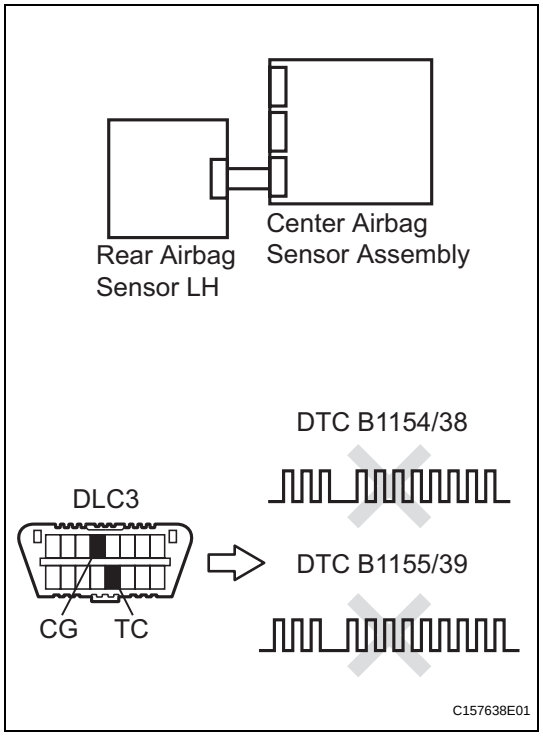


(a) Connect the connector to the center airbag sensor assembly.
(b) Interchange the rear airbag sensor LH with RH and connect the connectors to them.
(c) Connect the negative (-) terminal cable to the battery, and wait for at least 2 seconds.
(d) Turn the ignition switch to the ON position, and wait for at least 60 seconds.
(e) Clear the DTCs stored in memory (See page RS-35).
(f) Turn the ignition switch to the LOCK position.
(g) Turn the ignition switch to the ON position, and wait for at least 60 seconds.
(h) Check the DTCs (See page RS-35).

**Result**

| Result | Proceed to |
|---|---|
| DTC B1154/38 and B1155/39 are not output. | A |
| DTC B1154/38 is output. | B |
| DTC B1155/39 is output. | C |

HINT:
Codes other than DTC B1154/38 and B1155/39 may be output at this time, but they are not related to this check.

B → REPLACE CENTER AIRBAG SENSOR ASSEMBLY

C → REPLACE REAR AIRBAG SENSOR RH

A

USE SIMULATION METHOD TO CHECK