DTC	B1155/39	Rear Airbag Sensor LH Circuit Malfunction

DESCRIPTION

The rear airbag sensor LH circuit consists of the center airbag sensor assembly and rear airbag sensor LH.

If the center airbag sensor assembly receives signals from the rear airbag sensor LH, it judges whether or not the SRS should be activated.

DTC B1155/39 is recorded when a malfunction is detected in the rear airbag sensor LH circuit.

DTC No.	DTC Detecting Condition	Trouble Area
B1155/39	• The center airbag sensor assembly receives a line short circuit signal, an open circuit signal, a short circuit to ground signal or a short circuit to B+ signal in the rear airbag sensor LH circuit for 2 seconds. • Rear airbag sensor LH malfunction • Center airbag sensor assembly malfunction	• Rear airbag sensor LH • Center airbag sensor assembly • Floor wire

RS

WIRING DIAGRAM

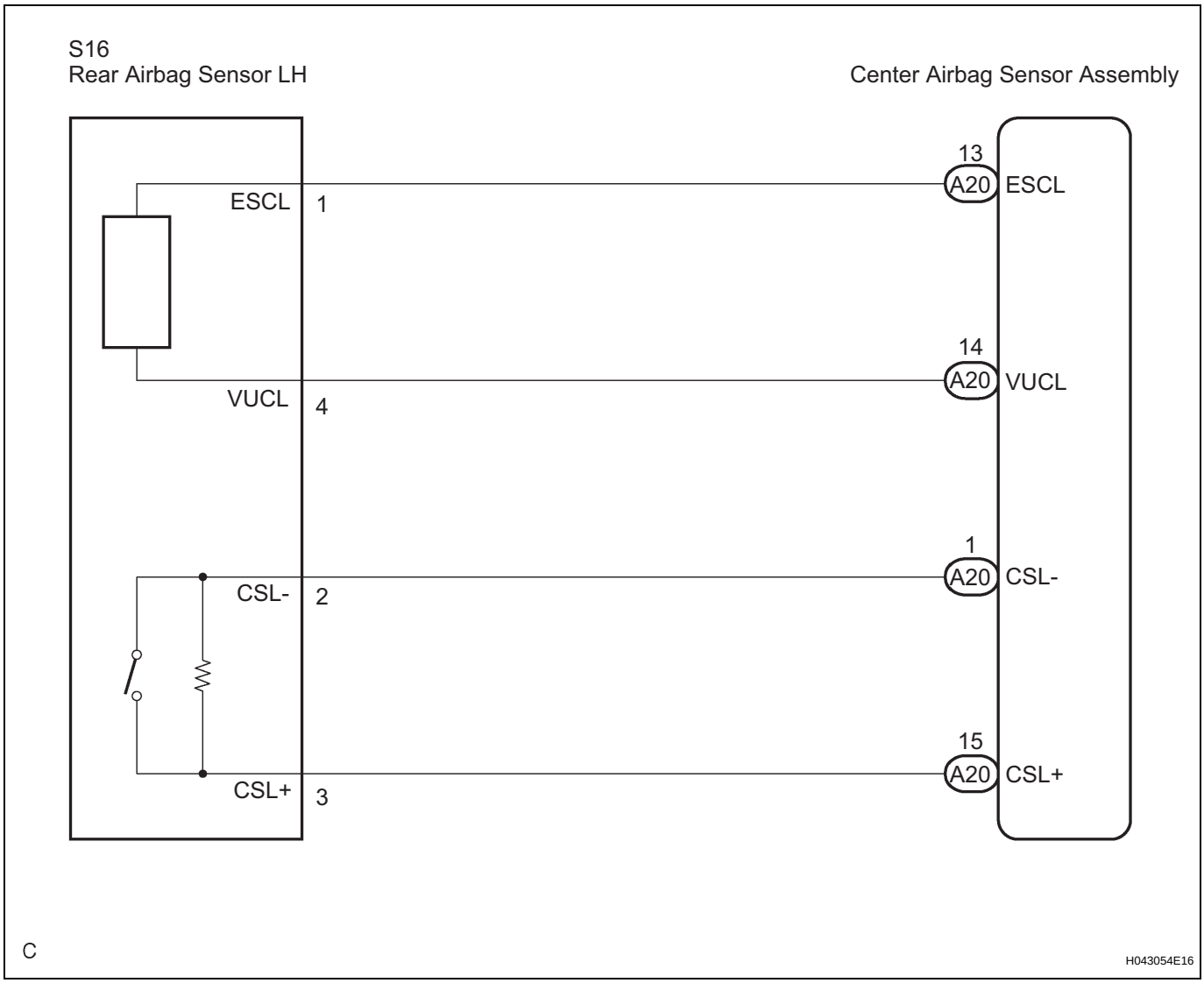

INSPECTION PROCEDURE

1	CHECK DTC

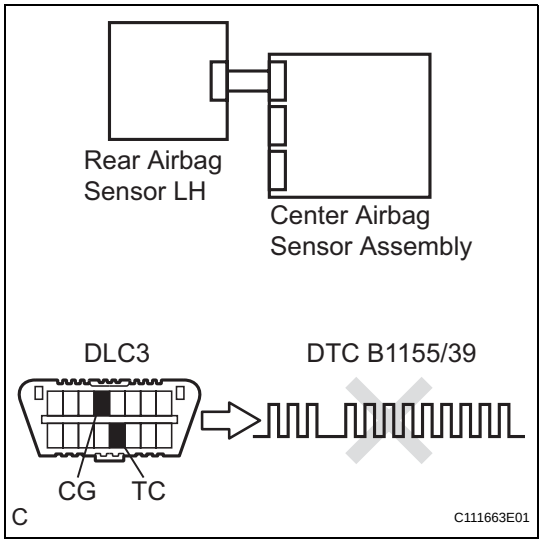

(a) Turn the ignition switch to the ON position, and wait for at least 60 seconds.
(b) Clear the DTCs stored in memory (See page RS-35).
(c) Turn the ignition switch to the LOCK position.
(d) Turn the ignition switch to the ON position, and wait for at least 60 seconds.
(e) Check the DTCs (See page RS-35).

OK:

DTC B1155/39 is not output.

HINT:

Codes other than code B1155/39 may be output at this time, but they are not related to this check.

NG → **Go to step 2**

OK

USE SIMULATION METHOD TO CHECK

2	CHECK CONNECTION OF CONNECTORS

(a) Turn the ignition switch to the LOCK position.
(b) Disconnect the negative (-) terminal cable from the battery, and wait for at least 90 seconds.
(c) Check that the connectors are properly connected to the center airbag sensor assembly and the rear airbag sensor LH.

OK:

The connectors are connected.

NG → **CONNECT CONNECTORS**

OK

3	CHECK FLOOR WIRE (OPEN)

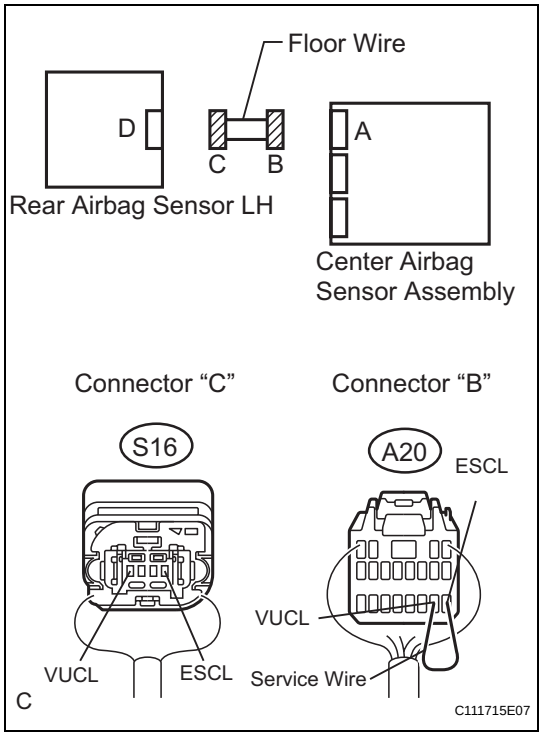

(a) Disconnect the connectors from the center airbag sensor assembly and the rear airbag sensor LH.
(b) Using a service wire, connect A20-14 (VUCL) and A20-13 (ESCL) of connector "B".
NOTICE:
Do not forcibly insert a service wire into the terminals of the connector when connecting.
(c) Measure the resistance according to the value(s) in the table below.
Standard resistance

Tester connection	Condition	Specified condition
S16-4 (VUCL) - S16-1 (ESCL)	Always	Below 1 Ω

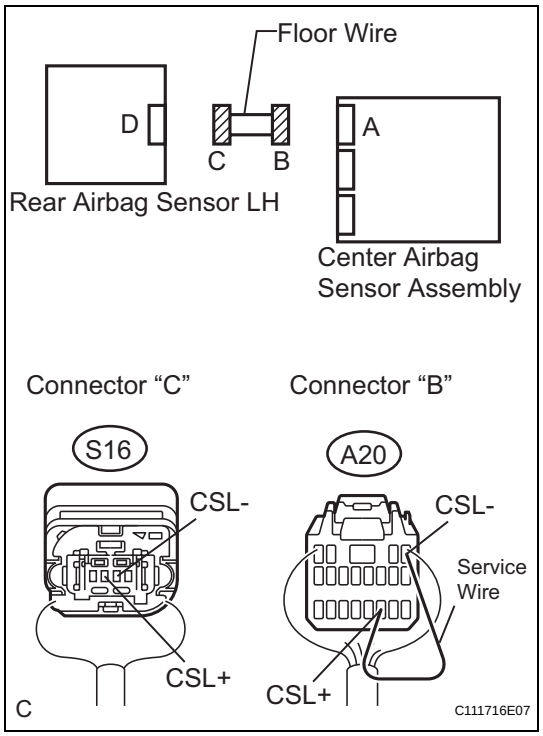

(d) Using a service wire, connect A20-15 (CSL+) and A20-1 (CSL-) of connector "B".
NOTICE:
Do not forcibly insert a service wire into the terminals of the connector when connecting.
(e) Measure the resistance according to the value(s) in the table below.
Standard resistance

Tester connection	Condition	Specified condition
S16-3 (CSL+) - S16-2 (CSL-)	Always	Below 1 Ω

NG → **REPAIR OR REPLACE FLOOR WIRE**

OK

4 CHECK FLOOR WIRE (SHORT TO B+)

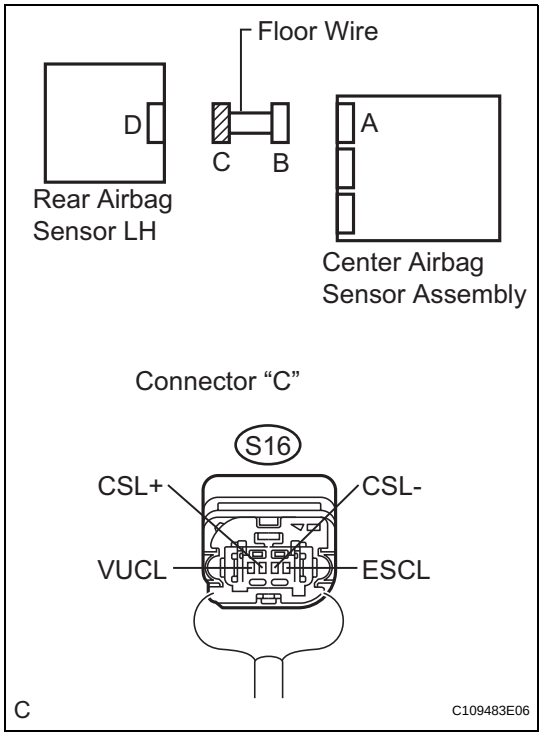

(a) Disconnect SST from connector "B".
(b) Connect the negative (-) terminal cable to the battery, and wait for at least 2 seconds.
(c) Turn the ignition switch to the ON position.
(d) Measure the voltage according to the value(s) in the table below.

Standard voltage

Tester connection	Condition	Specified condition
S16-4 (VUCL) - Body ground	Ignition switch ON	Below 1 V
S16-1 (ESCL) - Body ground	Ignition switch ON	Below 1 V
S16-3 (CSL+) - Body ground	Ignition switch ON	Below 1 V
S16-2 (CSL-) - Body ground	Ignition switch ON	Below 1 V

NG → REPAIR OR REPLACE FLOOR WIRE

OK

5 CHECK FLOOR WIRE (SHORT TO GROUND)

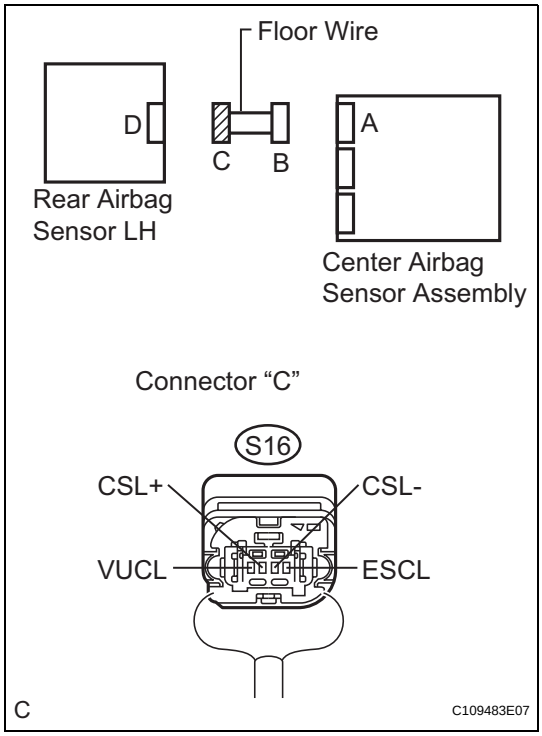

(a) Turn the ignition switch to the LOCK position.
(b) Disconnect the negative (-) terminal cable from the battery, and wait for at least 90 seconds.
(c) Measure the resistance according to the value(s) in the table below.

Standard resistance

Tester connection	Condition	Specified condition
S16-4 (VUCL) - Body ground	Always	1 MΩ or higher
S16-1 (ESCL) - Body ground	Always	1 MΩ or higher
S16-3 (CSL+) - Body ground	Always	1 MΩ or higher
S16-2 (CSL-) - Body ground	Always	1 MΩ or higher

NG → REPAIR OR REPLACE FLOOR WIRE

OK

6 CHECK FLOOR WIRE (SHORT)

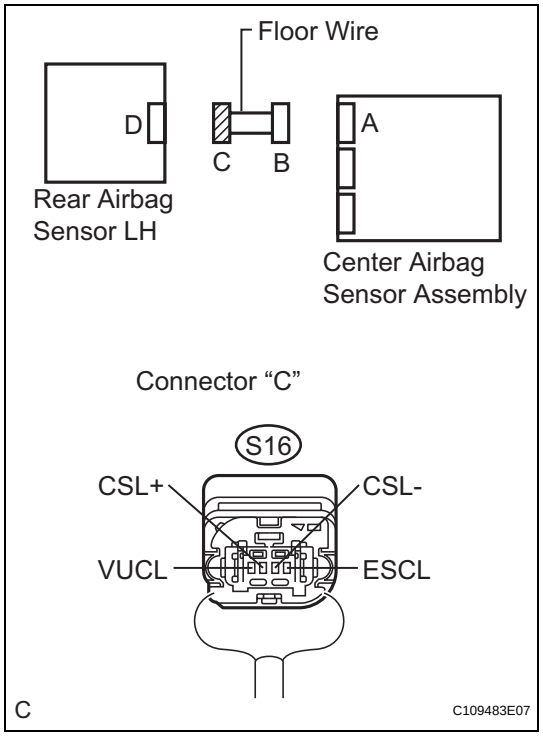

(a) Measure the resistance according to the value(s) in the table below.

Standard resistance

Tester connection	Condition	Specified condition
S16-4 (VUCL) - S16-1 (ESCL)	Always	1 MΩ or Higher
S16-3 (CSL+) - S16-2 (CSL-)	Always	1 MΩ or Higher

RS

NG → REPAIR OR REPLACE FLOOR WIRE

OK

7 CHECK REAR AIRBAG SENSOR LH

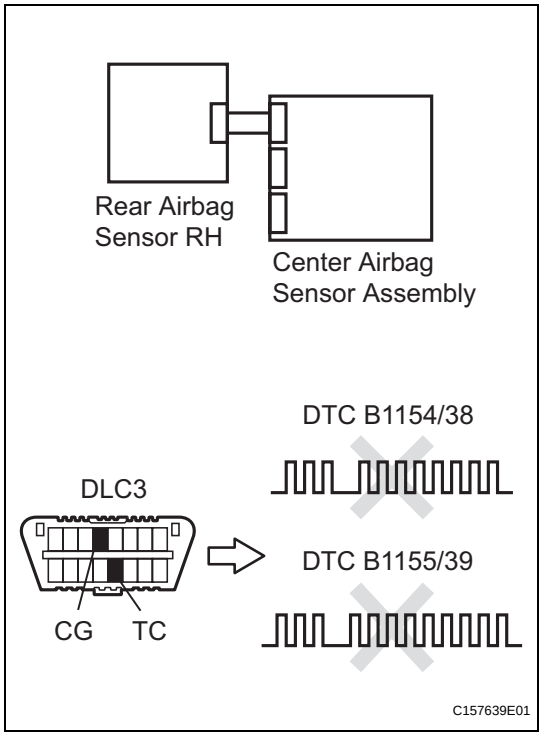

(a) Connect the connector to the center airbag sensor assembly.
(b) Interchange the rear airbag sensor RH with LH and connect the connectors to them.
(c) Connect the negative (-) terminal cable to the battery, and wait for at least 2 seconds.
(d) Turn the ignition switch to the ON position, and wait for at least 60 seconds.
(e) Clear the DTCs stored in memory (See page RS-35).
(f) Turn the ignition switch to the LOCK position.
(g) Turn the ignition switch to the ON position, and wait for at least 60 seconds.
(h) Check the DTCs (See page RS-35).

Result

Result	Proceed to
DTC B1154/38 and B1155/39 are not output.	A
DTC B1154/38 is output.	B
DTC B1155/39 is output.	C

HINT:
Codes other than DTC B1154/38 and B1155/39 may be output at this time, but they are not related to this check.

B → REPLACE REAR AIRBAG SENSOR LH

C → REPLACE CENTER AIRBAG SENSOR ASSEMBLY

A

USE SIMULATION METHOD TO CHECK