SRS Warning Light Remains ON

DESCRIPTION

The SRS warning light is located on the combination meter assembly.
When the SRS is normal, the SRS warning light comes on for approximately 6 seconds after the ignition switch is turned from the LOCK position to ON position, and then goes off automatically.
If there is a malfunction in the SRS, the SRS warning light comes on to inform the driver of a problem.
When terminals TC and CG of the DLC3 are connected, the DTC is displayed by blinking of the SRS warning light.
The SRS is equipped with a voltage-increase circuit (DC-DC converter) in the center airbag sensor assembly in case the source voltage drops.
When the battery voltage drops, the voltage-increase circuit (DC-DC converter) functions to increase the voltage of the SRS to normal voltage.
A malfunction in this circuit is not recorded in the center airbag sensor assembly. The SRS warning light automatically goes off when the source voltage returns to normal.
The signal to illuminate the SRS warning light is transmitted from the center airbag sensor assembly to the combination meter assembly through the multiplex communication system.

WIRING DIAGRAM

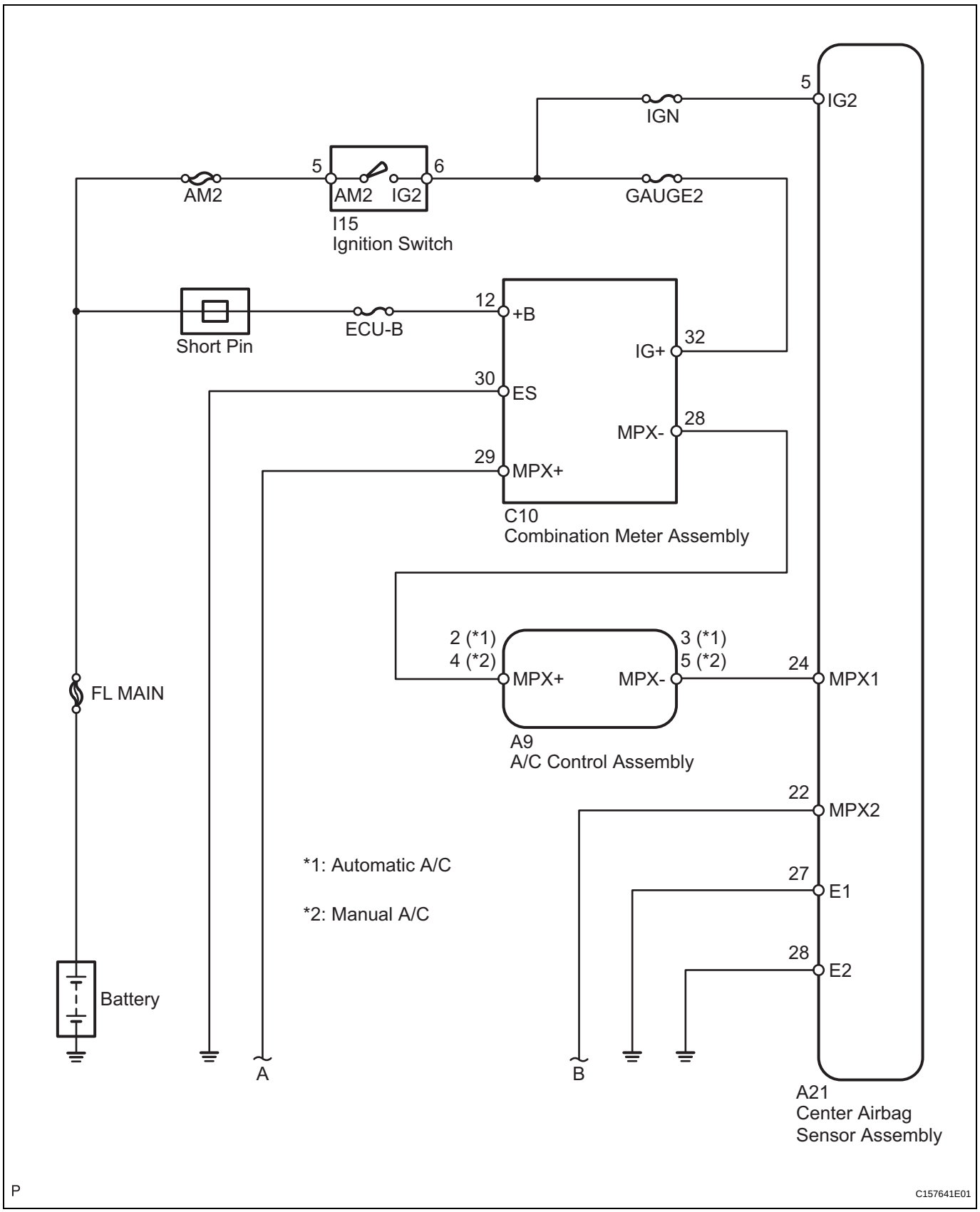

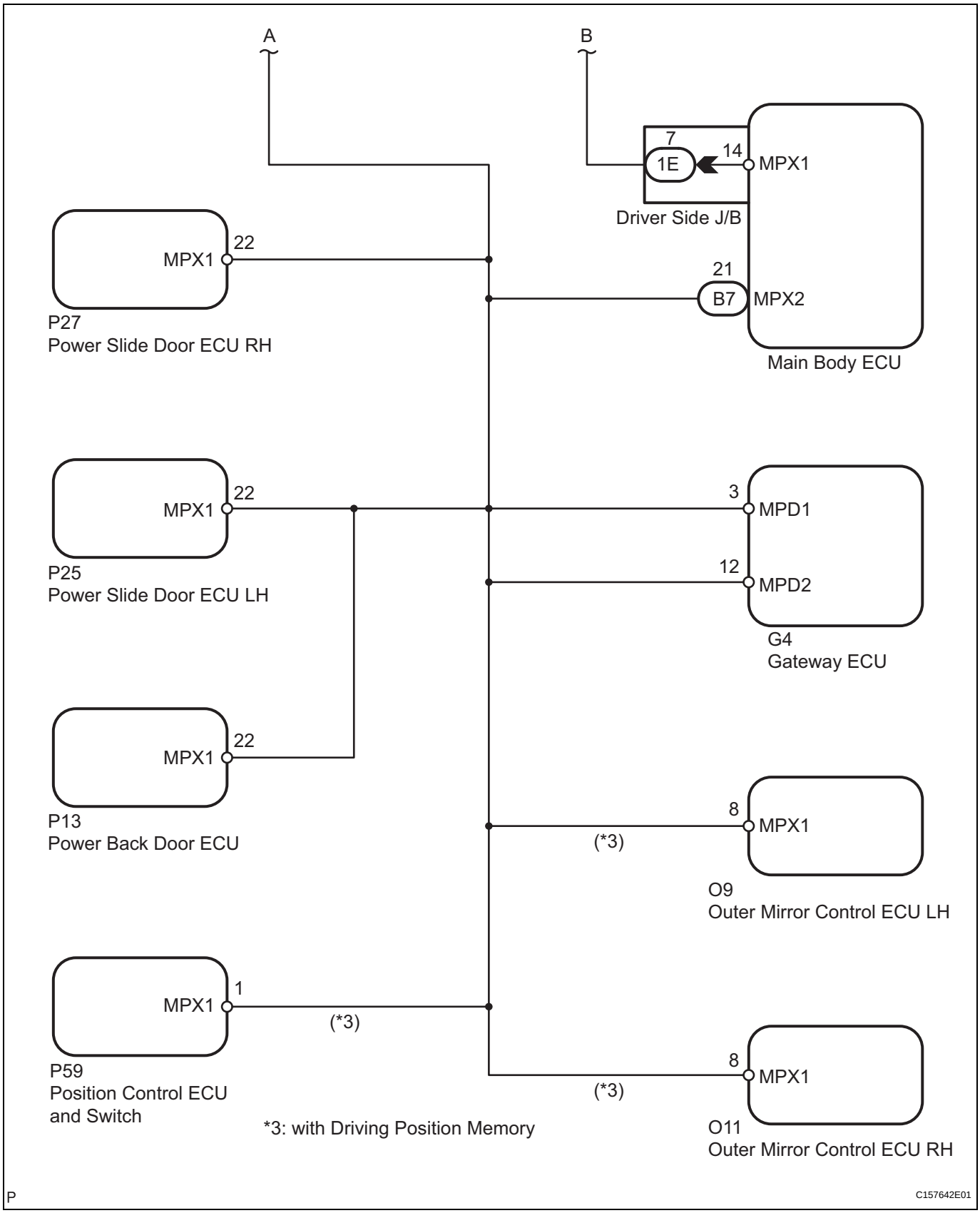
A
B
7
1E
14
MPX1
Driver Side J/B
MPX1
22
21
B7
MPX2
P27
Power Slide Door ECU RH
Main Body ECU
MPX1
22
3
MPD1
12
MPD2
P25
Power Slide Door ECU LH
G4
Gateway ECU
MPX1
22
P13
Power Back Door ECU
8
MPX1
(*3)
O9
Outer Mirror Control ECU LH
MPX1
1
(*3)
8
MPX1
(*3)
P59
Position Control ECU
and Switch
*3: with Driving Position Memory
O11
Outer Mirror Control ECU RH
P
C157642E01

INSPECTION PROCEDURE

1	CHECK MULTIPLEX COMMUNICATION SYSTEM

(a) Check if the multiplex communication DTC is output (See page MP-14).
HINT:
The center airbag sensor assembly of this system is connected to the multiplex communication system. Therefore, before starting troubleshooting, make sure to check that there is no trouble in the multiplex communication system.
OK:
The Multiplex communication system DTC is not output.

NG → **REPAIR CIRCUITS INDICATED BY OUTPUT DTCS**

OK

2	CHECK BATTERY

(a) Measure the voltage of the battery.
Standard voltage:
11 to 14 V

NG → **CHECK AND REPLACE BATTERY OR CHARGING SYSTEM**

OK

3	CHECK CONNECTORS

(a) Turn the ignition switch to the LOCK position.
(b) Disconnect the negative (-) terminal cable from the battery, and wait for at least 90 seconds.
(c) Check that the connectors are properly connected to the center airbag sensor assembly and combination meter assembly.
OK:
The connectors are properly connected.

NG → **CONNECT CONNECTORS**

OK

4 CHECK WIRE HARNESS (SOURCE VOLTAGE OF CENTER AIRBAG SENSOR ASSEMBLY)

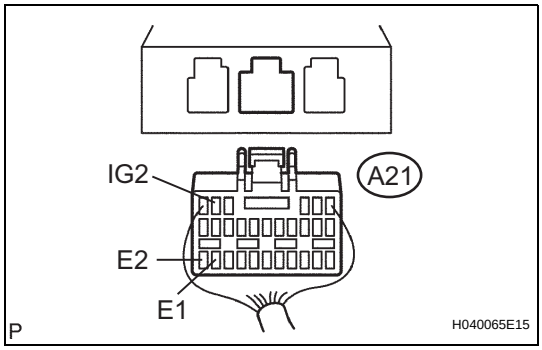

(a) Disconnect the connectors from the center airbag sensor assembly.
(b) Connect the negative (-) terminal cable to the battery, and wait for at least 2 seconds.
(c) Turn the ignition switch to the ON position.
(d) Operate all components of the electrical system (defogger, wipers, headlight, heater blower, etc.).
(e) Measure the voltage according to the value(s) in the table below.

Standard voltage

Tester connection	Condition	Specified condition
A21-5 (IG2) - Body ground	Ignition switch ON	10 to 14 V

(f) Turn the ignition switch to the LOCK position.
(g) Measure the resistance according to the value(s) in the table below.

Standard resistance

Tester connection	Condition	Specified condition
A21-27 (E1) - Body ground	Always	Below 1 Ω
A21-28 (E2) - Body ground	Always	Below 1 Ω

NG → **REPAIR OR REPLACE WIRE HARNESS**

OK

5 CHECK WIRE HARNESS (SOURCE VOLTAGE OF COMBINATION METER ASSEMBLY)

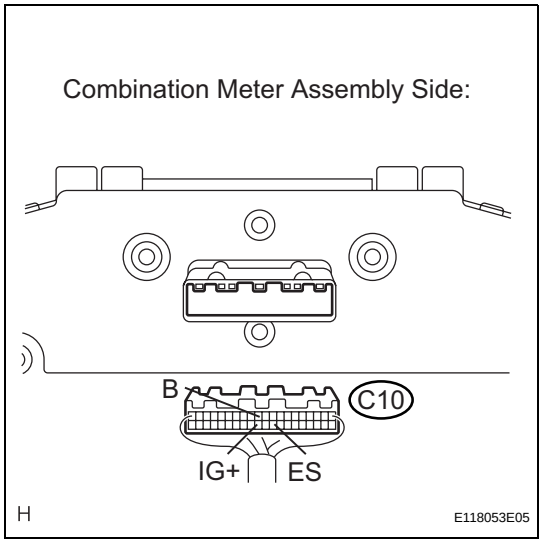

(a) Disconnect the negative (-) terminal cable from the battery, and wait for at least 90 seconds.
(b) Disconnect the connector from the combination meter assembly.
(c) Connect the negative (-) terminal cable to the battery, and wait for at least 2 seconds.
(d) Turn the ignition switch to the ON position.
(e) Measure the voltage according to the value(s) in the table below.

Standard voltage

Tester connection	Condition	Specified condition
C10-32 (IG+) - Body ground	Ignition switch ON	10 to 14 V
C10-12 (B) - Body ground	Always	10 to 14 V

(f) Turn the ignition switch to the LOCK position.
(g) Measure the resistance according to the value(s) in the table below.

Standard resistance

Tester connection	Condition	Specified condition
C10-30 (ES) - Body ground	Always	Below 1 Ω

NG → REPAIR OR REPLACE WIRE HARNESS

OK

6	CHECK SRS WARNING LIGHT

(a) Turn the ignition switch to the LOCK position.
(b) Disconnect the negative (-) terminal cable from the battery, and wait for at least 90 seconds.
(c) Connect the connector to the combination meter assembly.
(d) Connect the negative (-) terminal cable to the battery, and wait for at least 2 seconds.
(e) Turn the ignition switch to the ON position.
(f) Check the SRS warning light condition.

OK:

After the primary check period, SRS warning light goes off for approximately 10 seconds, and remains on.

HINT:
The primary check period shows approximately 6 seconds after the ignition switch is turned to the ON position.

NG → REPLACE COMBINATION METER ASSEMBLY

OK

REPLACE CENTER AIRBAG SENSOR ASSEMBLY