Diagnosis Circuit

DESCRIPTION

DTC output mode is set by connecting terminals TC and CG of the DLC3.
DTCs are displayed by blinking the SRS warning light.
HINT:

- When each warning light stays blinking, a ground short in the wiring of terminal TC of the DLC3 or an internal ground short in each ECU is suspected.
- A DTC output mode signal is transmitted through BEAN and CAN to each ECU including the center airbag sensor assembly. Thus when all systems do not enter DTC output mode, there may be an ECM malfunction.

WIRING DIAGRAM

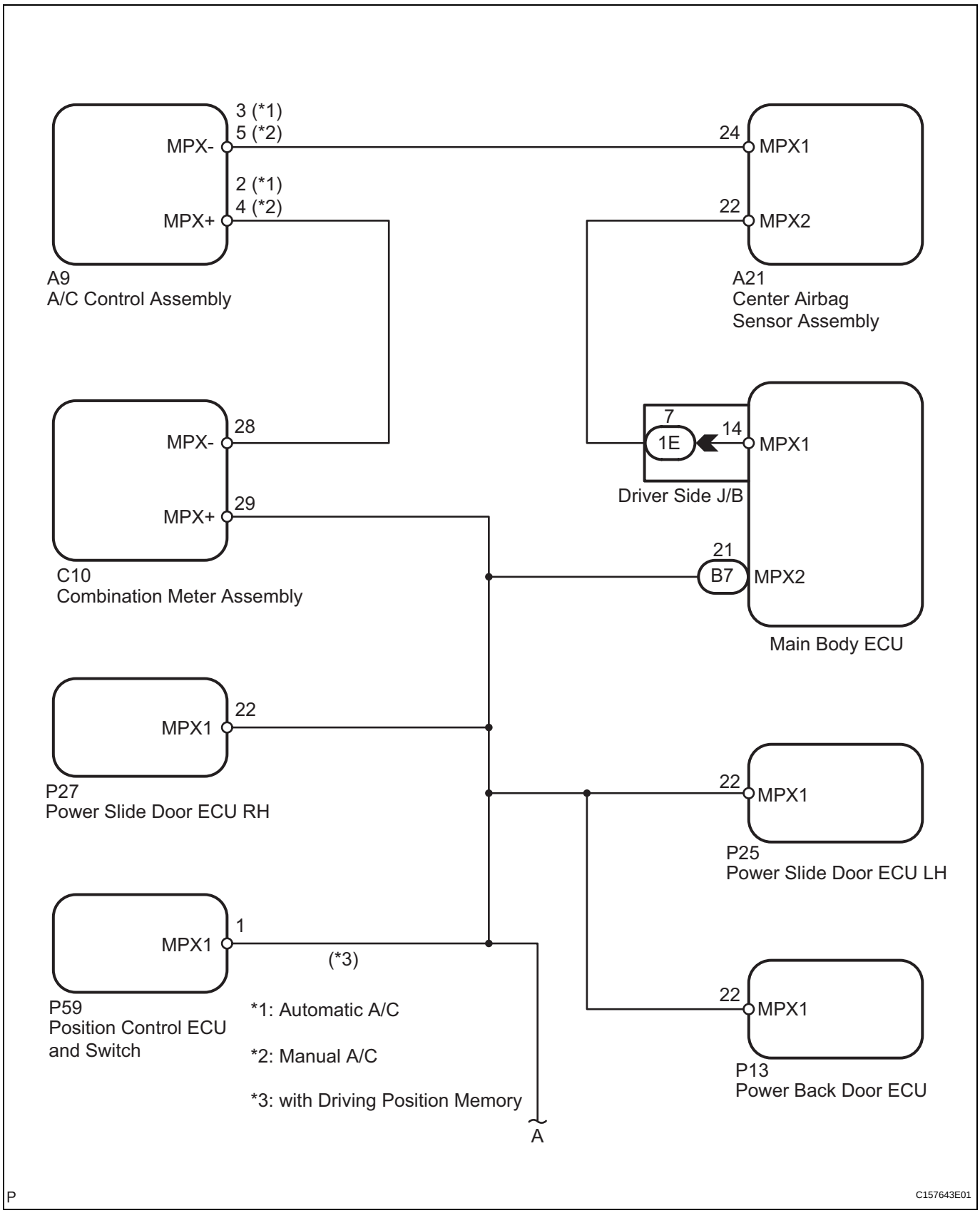

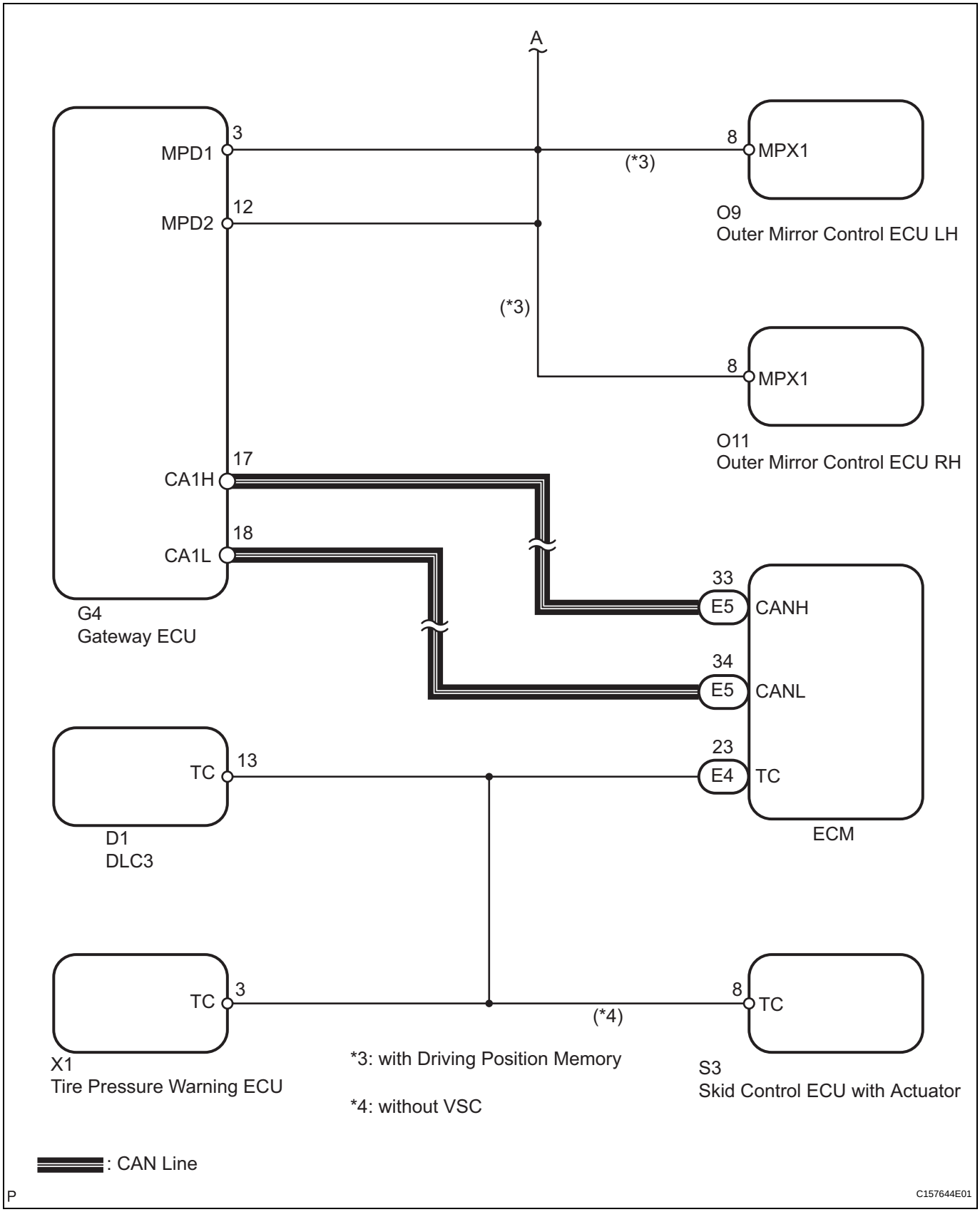
A
MPD1
3
MPD2
12
(*3)
8
MPX1
O9
Outer Mirror Control ECU LH
(*3)
8
MPX1
O11
Outer Mirror Control ECU RH
CA1H
17
CA1L
18
G4
Gateway ECU
33
E5
CANH
34
E5
CANL
TC
13
D1
DLC3
23
E4
TC
ECM
TC
3
(*4)
8
TC
X1
Tire Pressure Warning ECU
*3: with Driving Position Memory
*4: without VSC
S3
Skid Control ECU with Actuator
: CAN Line
P
C157644E01

INSPECTION PROCEDURE

1	CHECK MULTIPLEX COMMUNICATION SYSTEM

(a) Check if the multiplex communication system DTC is output (See page MP-14).
HINT:
The center airbag sensor assembly of this system is connected to the multiplex communication system. Therefore, before starting troubleshooting, make sure to check that there is no trouble in the multiplex communication system.
OK:
The Multiplex communication system DTC is not output.

NG → **REPAIR CIRCUITS INDICATED BY OUTPUT DTCS**

OK

2	CHECK CAN COMMUNICATION SYSTEM

(a) Use the intelligent tester to check if the CAN communication system is functioning normally (See page CA-7).
HINT:
The ECM is connected to the CAN communication system. Therefore, before starting troubleshooting, make sure to check that there is no trouble in the CAN communication system.
OK:
The CAN communication system is functioning normally.

NG → **REPAIR CAN COMMUNICATION CIRCUIT**

OK

3 CHECK WIRE HARNESS (TC OF DLC3 - TC OF ECM)

DLC3:

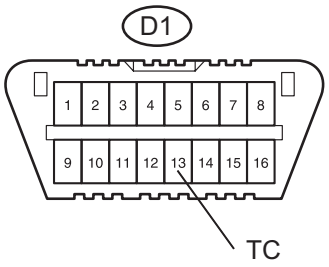

ECM Wire Harness View:

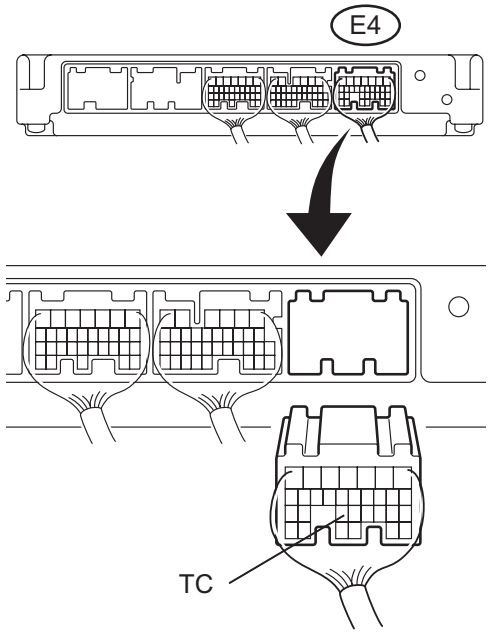

N

E127022E04

(a) Turn the ignition switch to the LOCK position.
(b) Disconnect the connector from the ECM.
(c) Measure the resistance according to the value(s) in the table below.

Standard resistance

Tester connection	Condition	Specified condition
D1-13 (TC) - E4-23 (TC)	Always	Below 1 Ω

RS

NG → **REPAIR OR REPLACE WIRE HARNESS (TC OF DLC3 - TC OF ECM)**

OK

4 CHECK WIRE HARNESS (CG OF DLC3 - BODY GROUND)

DLC3:

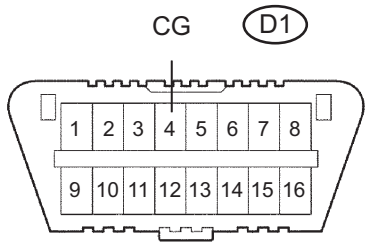

C128572E03

(a) Measure the resistance according to the value(s) in the table below.

Standard resistance

Tester connection	Condition	Specified condition
D1-4 (CG) - Body ground	Always	Below 1 Ω

NG → **REPAIR OR REPLACE WIRE HARNESS (CG OF DLC3 - BODY GROUND)**

OK

5	CHECK WIRE HARNESS (TC OF DLC3 - BODY GROUND)

DLC3:

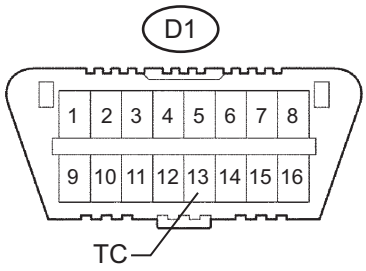

(a) Measure the resistance according to the value(s) in the table below.

Standard resistance

Tester connection	Condition	Specified condition
D1-13 (TC) - Body ground	Always	1 MΩ or higher

NG → **REPAIR OR REPLACE WIRE HARNESS OR EACH ECU**

OK

REPLACE CENTER AIRBAG SENSOR ASSEMBLY

RS