DTC	B0100/13	Short in Driver Side Squib Circuit

DESCRIPTION

The driver side squib circuit consists of the center airbag sensor assembly, the spiral cable and the steering pad. The circuit instructs the SRS to deploy when deployment conditions are met. DTC B0100/13 is recorded when a short circuit is detected in the driver side squib circuit.

DTC No.	DTC Detecting Condition	Trouble Area
B0100/13	• Short circuit between D+ wire harness and D- wire harness of driver side squib • Driver side squib malfunction • Spiral cable malfunction • Center airbag sensor assembly malfunction	• Steering pad (Driver side squib) • Spiral cable • Center airbag sensor assembly • Instrument panel wire

RS

WIRING DIAGRAM

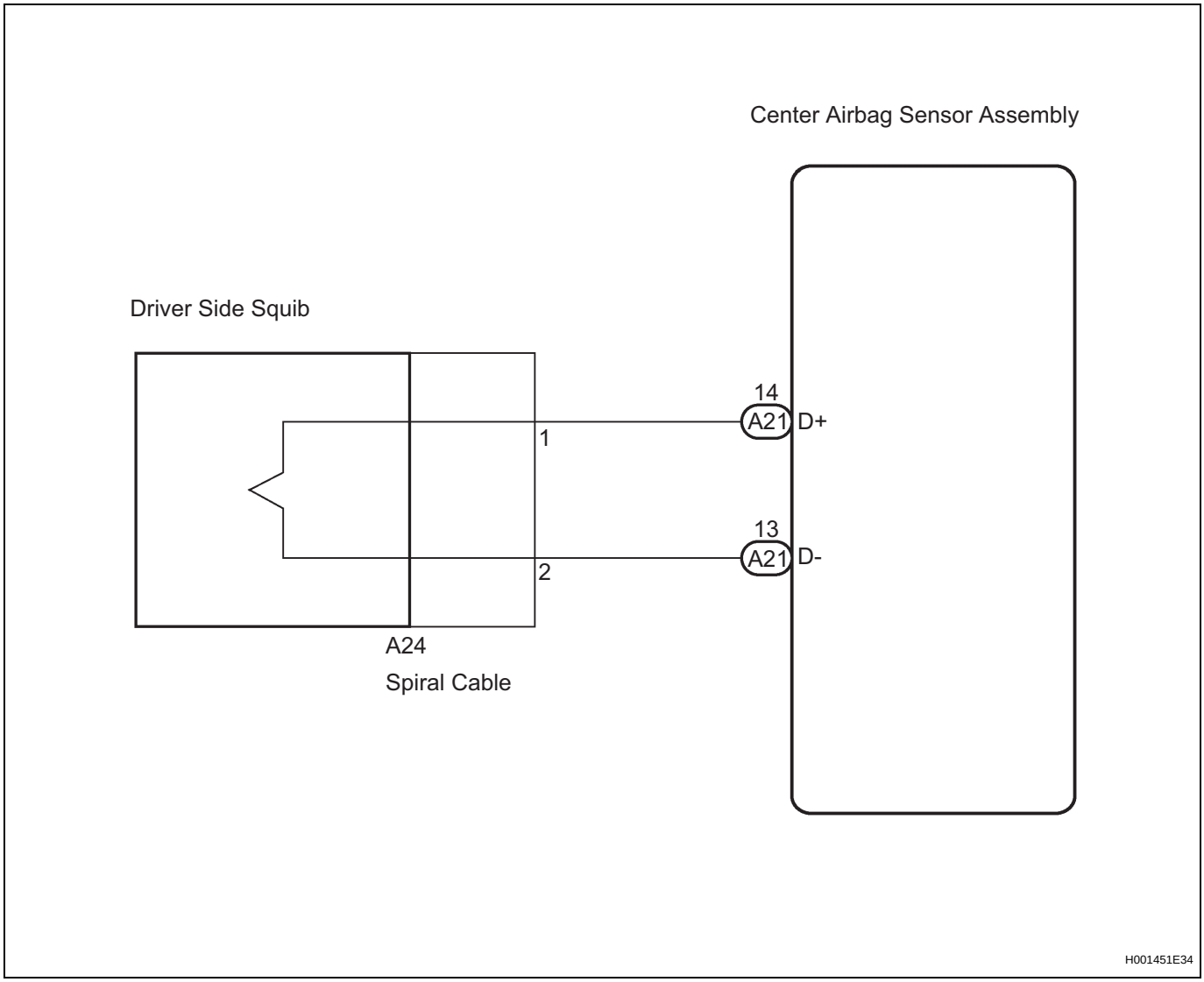

INSPECTION PROCEDURE

HINT:

- Perform the simulation method by selecting the "check mode" (signal check) with the intelligent tester (See page RS-38).

- After selecting the "check mode" (signal check), perform the simulation method by wiggling each connector of the airbag system or driving the vehicle on a city or rough road (See page RS-38).

1	CHECK STEERING PAD (DRIVER SIDE SQUIB)

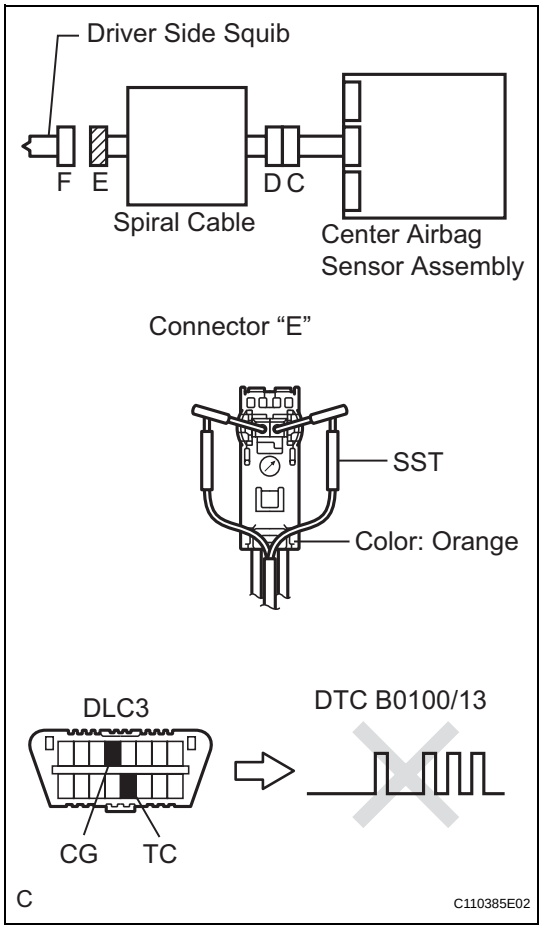

(a) Turn the ignition switch to the LOCK position.
(b) Disconnect the negative (-) terminal cable from the battery, and wait for at least 90 seconds.
(c) Disconnect the connectors from the steering pad.
(d) Connect the white wire side of SST (resistance 2.1 Ω) to the spiral cable.
CAUTION:
Never connect a tester to the steering pad (driver side squib) for measurement, as this may lead to a serious injury due to airbag deployment.
NOTICE:
Do not forcibly insert the SST into the terminals of the connector when connecting. Insert the SST straight into the terminals of the connector.
SST 09843-18060
(e) Connect the negative (-) terminal cable to the battery, and wait for at least 2 seconds.
(f) Turn the ignition switch to the ON position, and wait for at least 60 seconds.
(g) Clear the DTCs stored in memory (See page RS-35).
(h) Turn the ignition switch to the LOCK position.
(i) Turn the ignition switch to the ON position, and wait for at least 60 seconds.
(j) Check the DTCs (See page RS-35).
OK:
DTC B0100/13 is not output.
HINT:
Codes other than DTC B0100/13 may be output at this time, but they are not related to this check.

NG → **Go to step 2**

OK

REPLACE STEERING PAD

2	CHECK CONNECTORS

(a) Turn the ignition switch to the LOCK position.
(b) Disconnect the negative (-) terminal cable from the battery, and wait for at least 90 seconds.
(c) Disconnect the SST (resistance 2.1 Ω) from the spiral cable.
(d) Check that the spiral cable connectors (on the steering pad side) are not damaged.

OK:
The lock button is not disengaged, and the claw of the lock is not deformed or damaged.

NG → **REPLACE SPIRAL CABLE**

OK

3 CHECK DRIVER SIDE SQUIB CIRCUIT

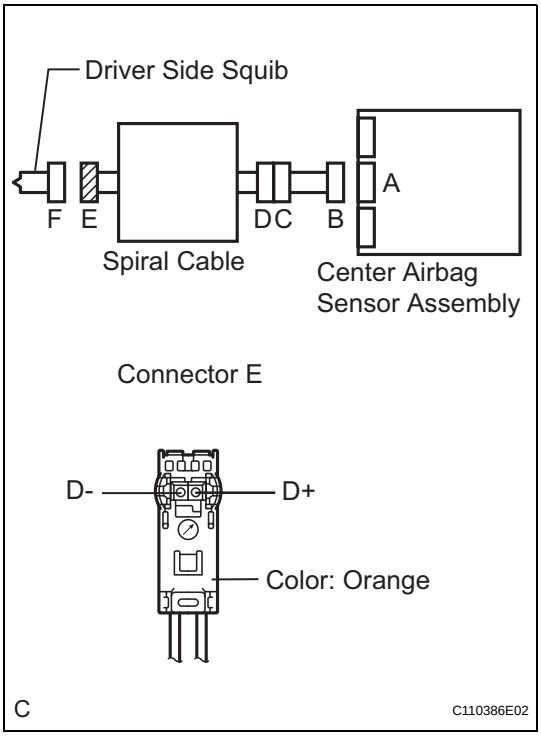

(a) Disconnect the connector from the center airbag sensor assembly.
(b) Release the activation prevention mechanism built into connector "B" (See page RS-27).
(c) Measure the resistance according to the value(s) in the table below.
Standard resistance

Tester connection	Condition	Specified condition
D+ - D-	Always	1 MΩ or higher

NG → **Go to step 5**

OK

4 CHECK CENTER AIRBAG SENSOR ASSEMBLY

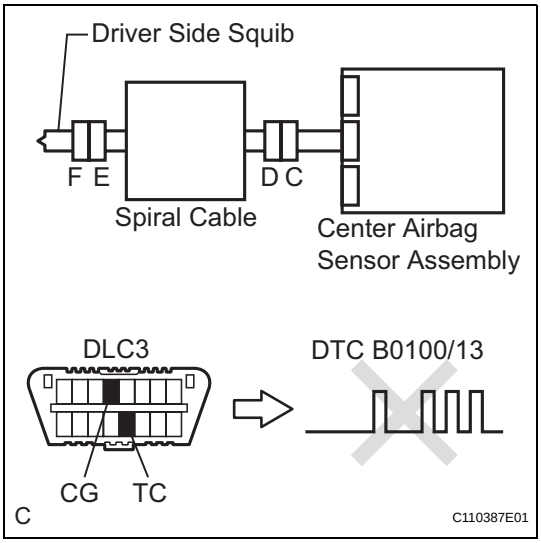

(a) Connect the connectors to the steering pad and the center airbag sensor assembly.
(b) Connect the negative (-) terminal cable to the battery, and wait for at least 2 seconds.
(c) Turn the ignition switch to the ON position, and wait for at least 60 seconds.
(d) Clear the DTCs stored in memory (See page RS-35).
(e) Turn the ignition switch to the LOCK position.
(f) Turn the ignition switch to the ON position, and wait for at least 60 seconds.
(g) Check the DTCs (See page RS-35).
OK:
DTC B0100/13 is not output.
HINT:
Codes other than code B0100/13 may be output at this time, but they are not related to this check.

NG → REPLACE CENTER AIRBAG SENSOR ASSEMBLY

OK

USE SIMULATION METHOD TO CHECK

5 CHECK INSTRUMENT PANEL WIRE

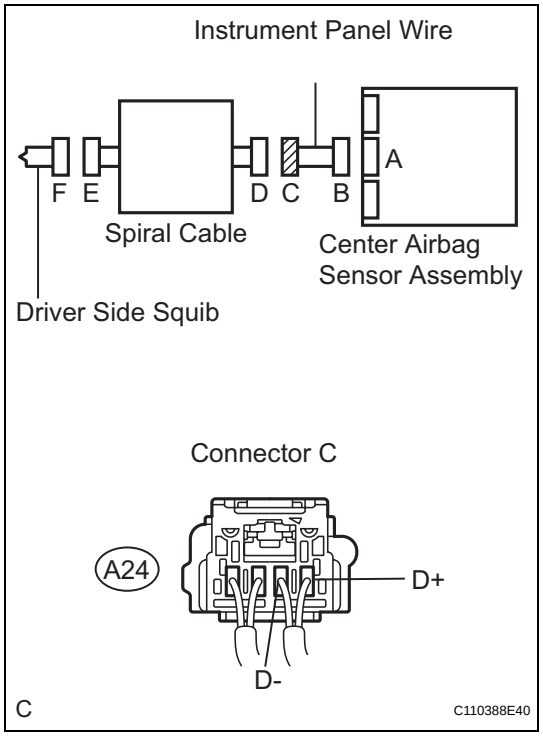

(a) Disconnect the instrument panel wire connector from the spiral cable.
HINT:
The activation prevention mechanism of connector "B" has already been released.

(b) Measure the resistance according to the value(s) in the table below.
Standard resistance

Tester connection	Condition	Specified condition
A24-1 (D+) - A24-2 (D-)	Always	1 MΩ or higher

NG → REPAIR OR REPLACE INSTRUMENT PANEL WIRE

OK

6	CHECK SPIRAL CABLE

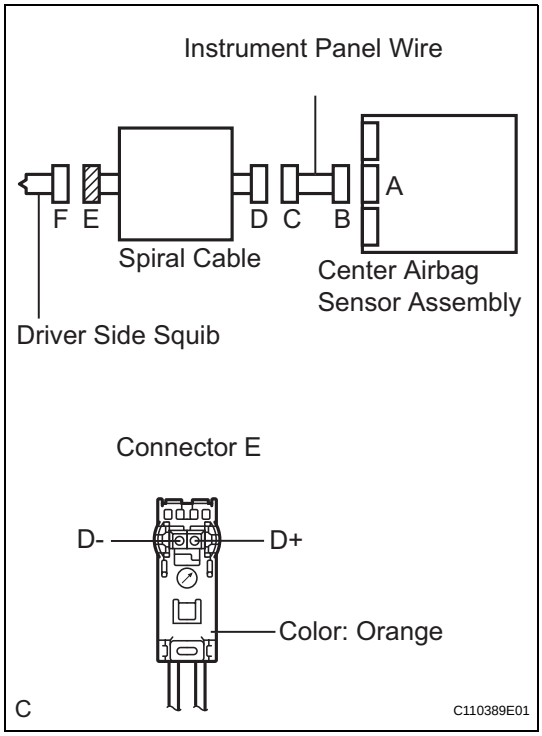

(a) Release the activation prevention mechanism built into connector "D" (See page RS-27).
(b) Measure the resistance according to the value(s) in the table below.

Standard resistance

Tester connection	Condition	Specified condition
D+ - D-	Always	1 MΩ or higher

NG → **REPLACE SPIRAL CABLE**

OK

USE SIMULATION METHOD TO CHECK