DTC	B0102/11	Short to GND in Driver Side Squib Circuit

DESCRIPTION

The driver side squib circuit consists of the center airbag sensor assembly, the spiral cable and the steering pad.
The circuit instructs the SRS to deploy when deployment conditions are met.
DTC B0102/11 is recorded when a short to ground is detected in the driver side squib circuit.

DTC No.	DTC Detecting Condition	Trouble Area
B0102/11	• Short circuit in driver side squib wire harness (to ground) • Driver side squib malfunction • Spiral cable malfunction • Center airbag sensor assembly malfunction	• Steering pad (Driver side squib) • Spiral cable • Center airbag sensor assembly • Instrument panel wire

WIRING DIAGRAM

See page RS-49.

INSPECTION PROCEDURE

HINT:

- Perform the simulation method by selecting the "check mode" (signal check) with the intelligent tester (See page RS-38).
- After selecting the "check mode" (signal check), perform the simulation method by wiggling each connector of the airbag system or driving the vehicle on a city or rough road (See page RS-38).

1	CHECK STEERING PAD (DRIVER SIDE SQUIB)

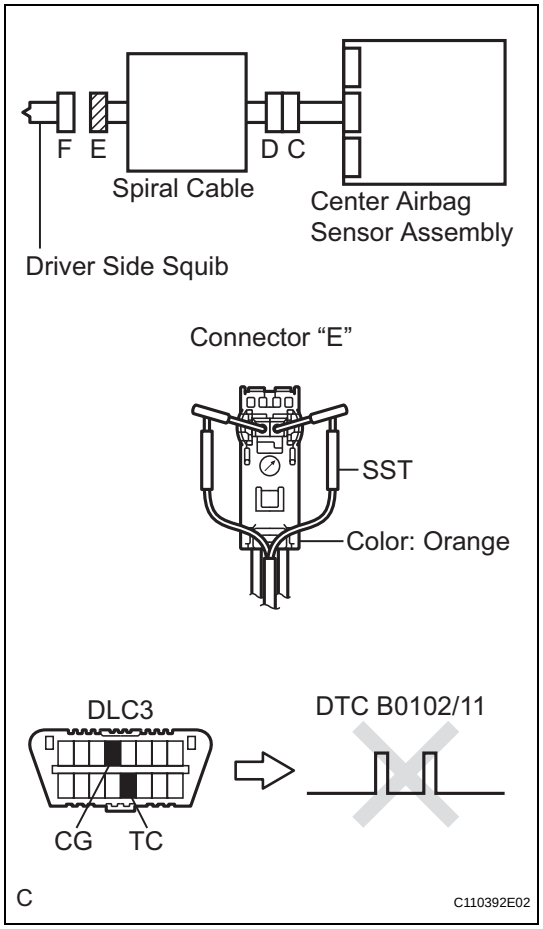

(a) Turn the ignition switch to the LOCK position.
(b) Disconnect the negative (-) terminal cable from the battery, and wait for at least 90 seconds.
(c) Disconnect the connectors from the steering pad.
(d) Connect the white wire side of SST (resistance 2.1 Ω) to the spiral cable.

CAUTION:
Never connect a tester to the steering pad (driver side squib) for measurement, as this may lead to a serious injury due to airbag deployment.
NOTICE:
Do not forcibly insert the SST into the terminals of the connector when connecting.
Insert the SST straight into the terminals of the connector.

SST 09843-18060

(e) Connect the negative (-) terminal cable to the battery, and wait for at least 2 seconds.
(f) Turn the ignition switch to the ON position, and wait for at least 60 seconds.
(g) Clear the DTCs stored in memory (See page RS-35).
(h) Turn the ignition switch to the LOCK position.
(i) Turn the ignition switch to the ON position, and wait for at least 60 seconds.
(j) Check the DTCs (See page RS-35).

OK:
DTC B0102/11 is not output.

HINT:
Codes other than DTC B0102/11 may be output at this time, but they are not related to this check.

NG → **Go to step 2**

OK ↓

REPLACE STEERING PAD

2 CHECK DRIVER SIDE SQUIB CIRCUIT

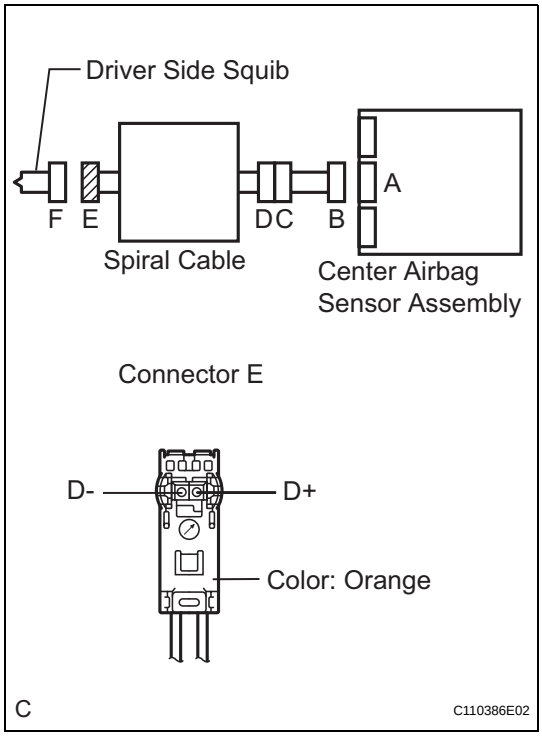

(a) Turn the ignition switch to the LOCK position.
(b) Disconnect the negative (-) terminal cable from the battery, and wait for at least 90 seconds.
(c) Disconnect the SST (resistance 2.1 Ω) from the spiral cable.
(d) Disconnect the connector from the center airbag sensor assembly.
(e) Measure the resistance according to the value(s) in the table below.

Standard resistance

Tester connection	Condition	Specified condition
D+ - Body ground	Always	1 MΩ or higher
D- - Body ground	Always	1 MΩ or higher

NG → **Go to step 4**

OK

3 CHECK CENTER AIRBAG SENSOR ASSEMBLY

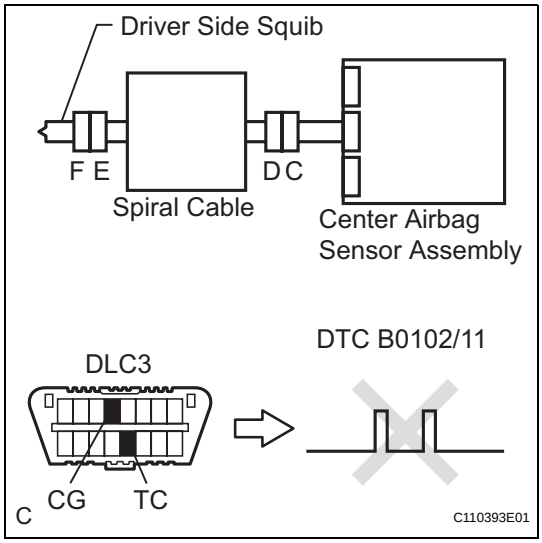

(a) Connect the connectors to the steering pad and the center airbag sensor assembly.
(b) Connect the negative (-) terminal cable to the battery, and wait for at least 2 seconds.
(c) Turn the ignition switch to the ON position, and wait for at least 60 seconds.
(d) Clear the DTCs stored in memory (See page RS-35).
(e) Turn the ignition switch to the LOCK position.
(f) Turn the ignition switch to the ON position, and wait for at least 60 seconds.
(g) Check the DTCs (See page RS-35).

OK:

DTC B0102/11 is not output.

HINT:

Codes other than code B0102/11 may be output at this time, but they are not related to this check.

NG → **REPLACE CENTER AIRBAG SENSOR ASSEMBLY**

OK

USE SIMULATION METHOD TO CHECK

4 CHECK INSTRUMENT PANEL WIRE

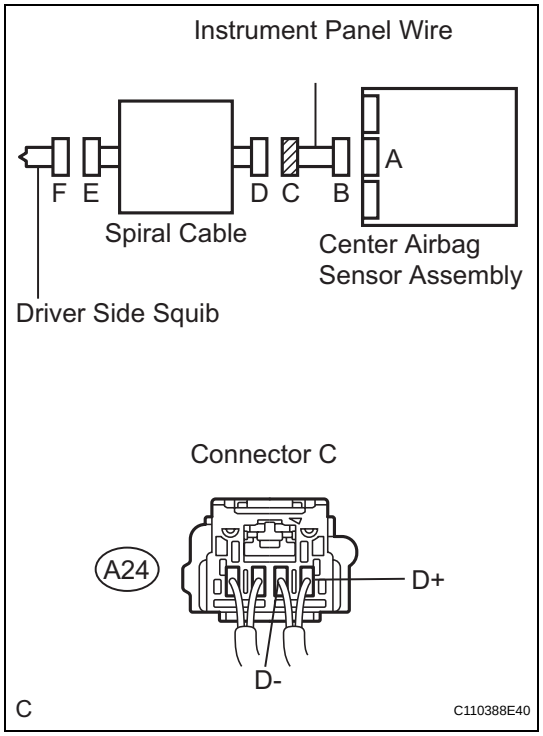

(a) Disconnect the instrument panel wire connector from the spiral cable.
(b) Measure the resistance according to the value(s) in the table below.

Standard resistance

Tester connection	Condition	Specified condition
A24-1 (D+) - Body ground	Always	1 MΩ or higher
A24-2 (D-) - Body ground	Always	1 MΩ or higher

RS

NG → **REPAIR OR REPLACE INSTRUMENT PANEL WIRE**

OK

5 CHECK SPIRAL CABLE

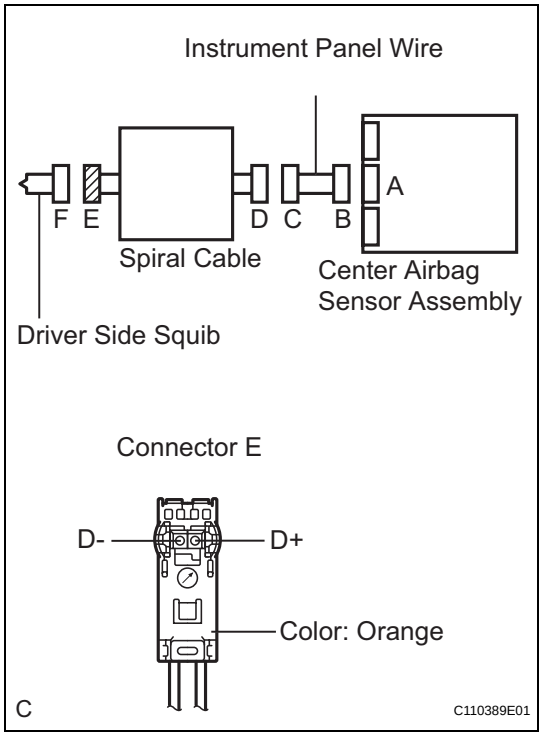

(a) Measure the resistance according to the value(s) in the table below.

Standard resistance

Tester connection	Condition	Specified condition
D+ - Body ground	Always	1 MΩ or higher
D- - Body ground	Always	1 MΩ or higher

NG → **REPLACE SPIRAL CABLE**

OK

USE SIMULATION METHOD TO CHECK