DTC	B0105/53	Short in Front Passenger Side Squib Circuit

DESCRIPTION

The front passenger side squib circuit consists of the center airbag sensor assembly and the front passenger airbag assembly.
The circuit instructs the SRS to deploy when deployment conditions are met.
DTC B0105/53 is recorded when a short circuit is detected in the front passenger side squib circuit.

DTC No.	DTC Detecting Condition	Trouble Area
B0105/53	• Short circuit between P+ wire harness and P- wire harness of front passenger side squib • Front passenger side squib malfunction • Center airbag sensor assembly malfunction	• Front passenger airbag assembly (Front passenger side squib) • Center airbag sensor assembly • Instrument panel wire

RS

WIRING DIAGRAM

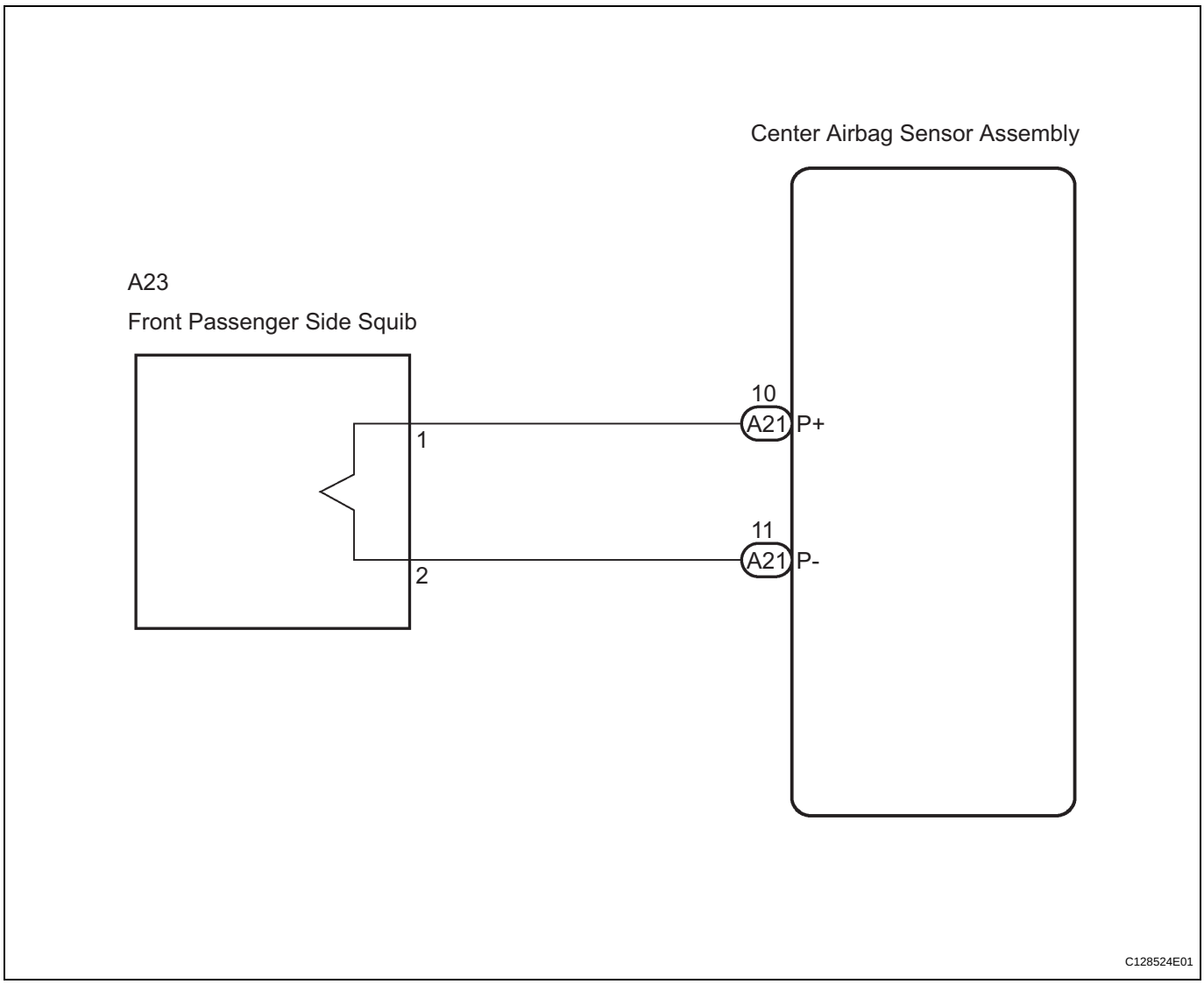

INSPECTION PROCEDURE

HINT:

- Perform the simulation method by selecting the "check mode" (signal check) with the intelligent tester (See page RS-38).

- After selecting the "check mode" (signal check), perform the simulation method by wiggling each connector of the airbag system or driving the vehicle on a city or rough road (See page RS-38).

1	CHECK FRONT PASSENGER AIRBAG ASSEMBLY (FRONT PASSENGER SIDE SQUIB)

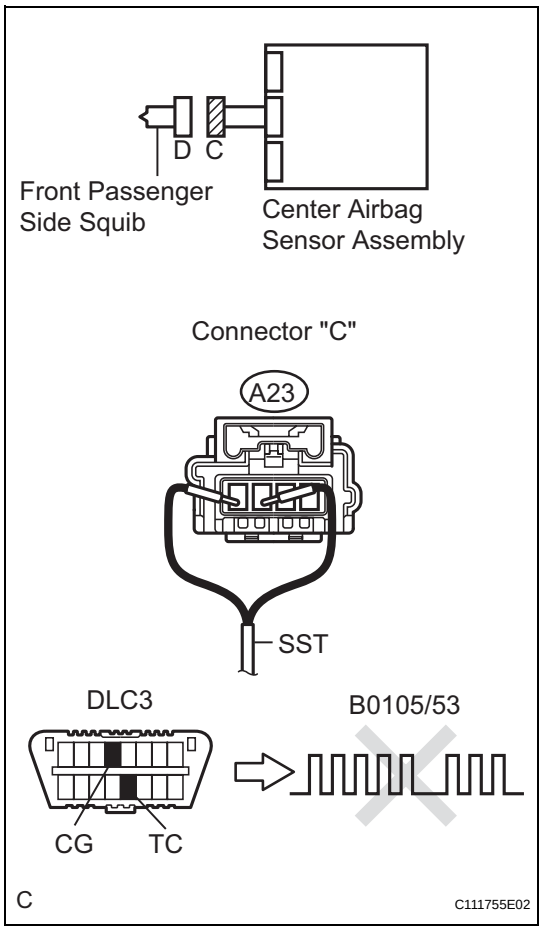

(a) Turn the ignition switch to the LOCK position.
(b) Disconnect the negative (-) terminal cable from the battery, and wait for at least 90 seconds.
(c) Disconnect the connectors from the front passenger airbag assembly.
(d) Connect the black wire side of SST (resistance 2.1 Ω) to the instrument panel wire.
CAUTION:
Never connect a tester to the front passenger airbag assembly (front passenger side squib) for measurement, as this may lead to a serious injury due to airbag deployment.
NOTICE:
Do not forcibly insert the SST into the terminals of the connector when connecting.
Insert the SST straight into the terminals of the connector.
SST 09843-18060
(e) Connect the negative (-) terminal cable to the battery, and wait for at least 2 seconds.
(f) Turn the ignition switch to the ON position, and wait for at least 60 seconds.
(g) Clear the DTCs stored in memory (See page RS-35).
(h) Turn the ignition switch to the LOCK position.
(i) Turn the ignition switch to the ON position, and wait for at least 60 seconds.
(j) Check the DTCs (See page RS-35).
OK:
DTC B0105/53 is not output.
HINT:
Codes other than DTC B0105/53 may be output at this time, but they are not related to this check.

NG → **Go to step 2**

OK

REPLACE FRONT PASSENGER AIRBAG ASSEMBLY

RS

2 CHECK INSTRUMENT PANEL WIRE (FRONT PASSENGER SIDE SQUIB CIRCUIT)

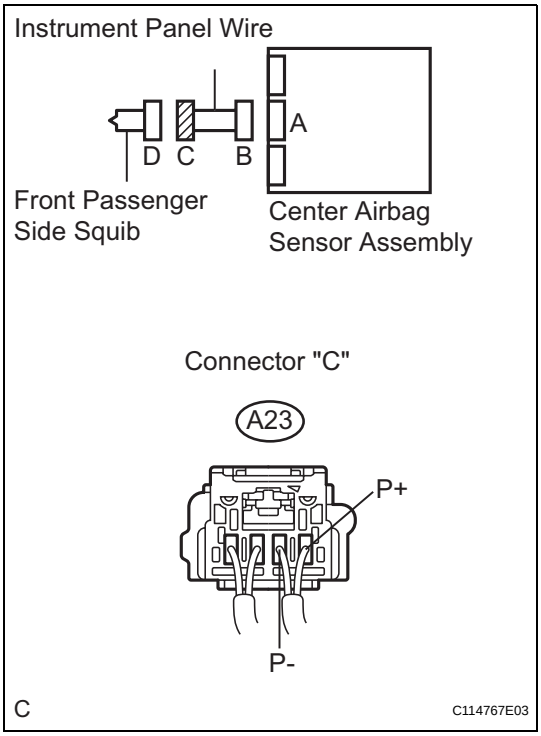

(a) Turn the ignition switch to the LOCK position.
(b) Disconnect the negative (-) terminal cable from the battery, and wait for at least 90 seconds.
(c) Disconnect the SST (resistance 2.1 Ω) from the instrument panel wire.
(d) Disconnect the connector from the center airbag sensor assembly.
(e) Release the activation prevention mechanism built into connector "B" (See page RS-27).
(f) Measure the resistance according to the value(s) in the table below.

Standard resistance

Tester connection	Condition	Specified condition
A23-1 (P+) - A23-2 (P-)	Always	1 MΩ or higher

NG → **REPAIR OR REPLACE INSTRUMENT PANEL WIRE**

OK

3 CHECK CENTER AIRBAG SENSOR ASSEMBLY

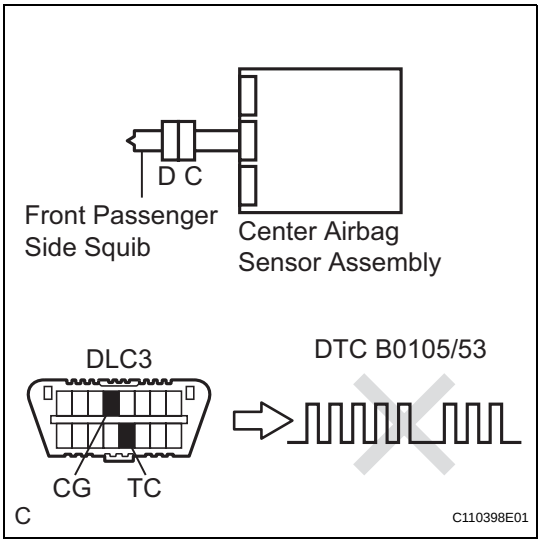

(a) Connect the connectors to the front passenger airbag assembly and the center airbag sensor assembly.
(b) Connect the negative (-) terminal cable to the battery, and wait for at least 2 seconds.
(c) Turn the ignition switch to the ON position, and wait for at least 60 seconds.
(d) Clear the DTCs stored in memory (See page RS-35).
(e) Turn the ignition switch to the LOCK position.
(f) Turn the ignition switch to the ON position, and wait for at least 60 seconds.
(g) Check the DTCs (See page RS-35).

OK:

DTC B0105/53 is not output.

HINT:

Codes other than code B0105/53 may be output at this time, but they are not related to this check.

NG → **REPLACE CENTER AIRBAG SENSOR ASSEMBLY**

OK

USE SIMULATION METHOD TO CHECK