DTC	B0110/43	Short in Side Squib RH Circuit

DESCRIPTION

The side squib RH circuit consists of the center airbag sensor assembly and the front seat side airbag assembly RH.
The circuit instructs the SRS to deploy when deployment conditions are met.
DTC B0110/43 is recorded when a short circuit is detected in the side squib RH circuit.

DTC No.	DTC Detecting Condition	Trouble Area
B0110/43	• Short circuit between SFR+ wire harness and SFR- wire harness of side squib RH • Side squib RH malfunction • Center airbag sensor assembly malfunction	• Front seat side airbag assembly RH (Side squib RH) • Center airbag sensor assembly • Floor wire No. 2

RS

WIRING DIAGRAM

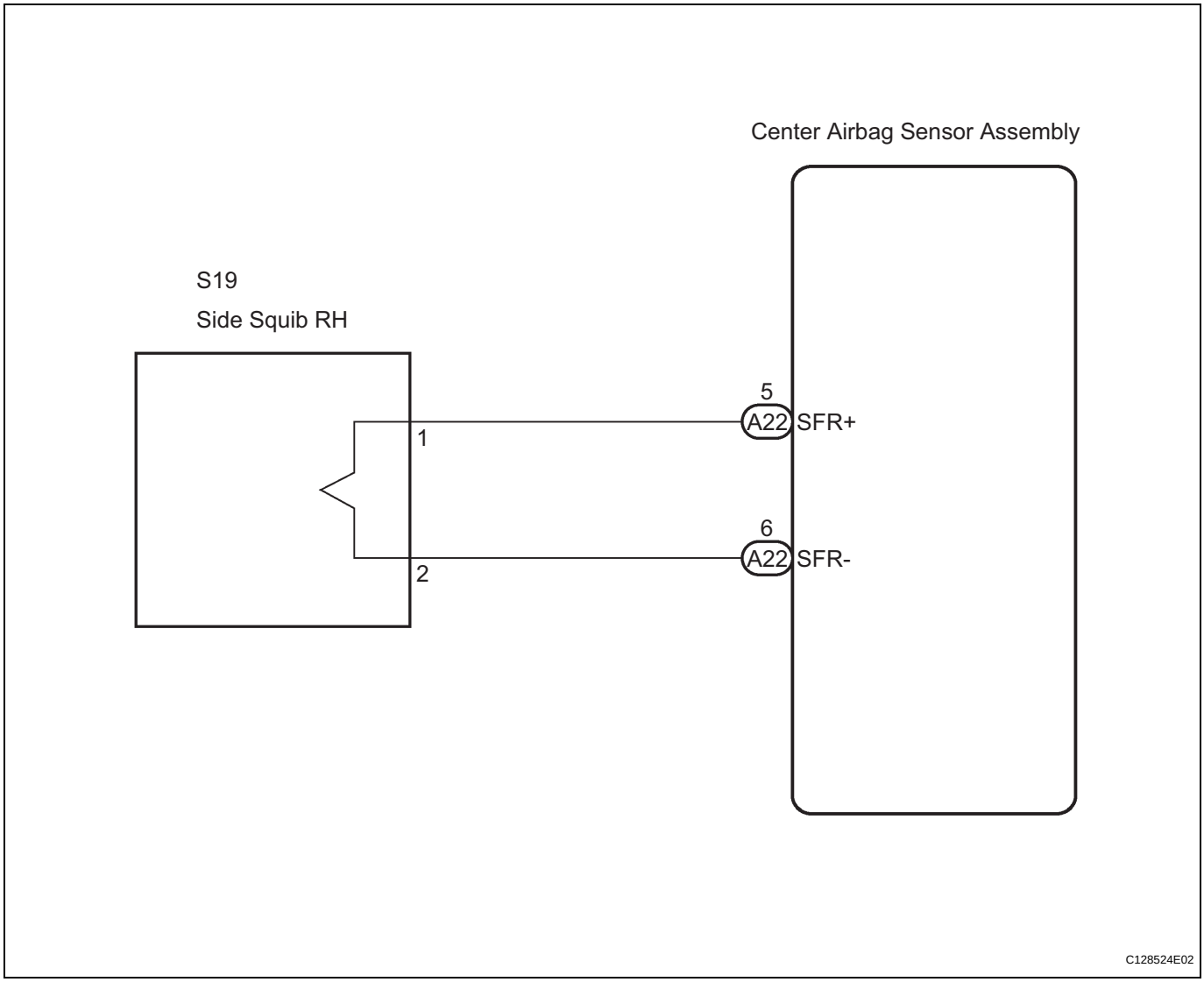

INSPECTION PROCEDURE

HINT:

- Perform the simulation method by selecting the "check mode" (signal check) with the intelligent tester (See page RS-38).

- After selecting the "check mode" (signal check), perform the simulation method by wiggling each connector of the airbag system or driving the vehicle on a city or rough road (See page RS-38).

1	CHECK FRONT SEAT SIDE AIRBAG ASSEMBLY RH (SIDE SQUIB RH)

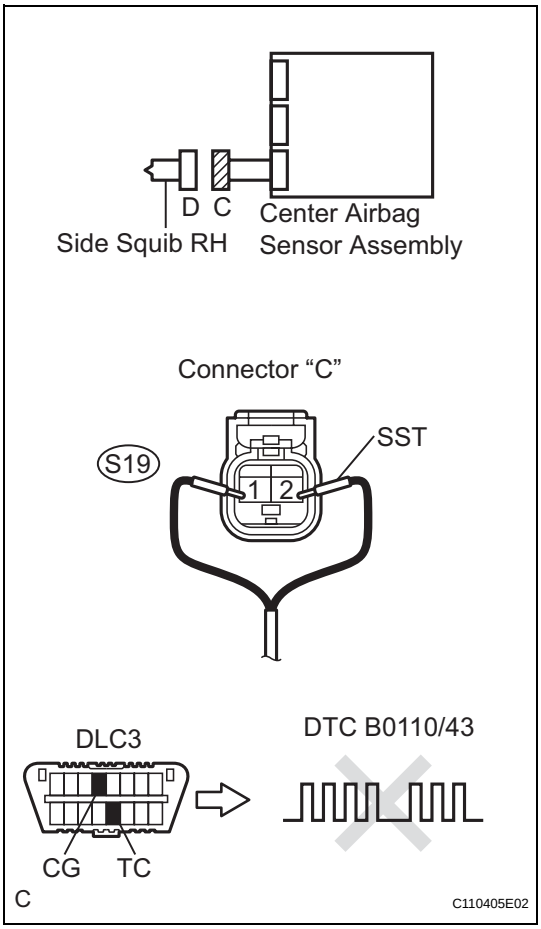

(a) Turn the ignition switch to the LOCK position.
(b) Disconnect the negative (-) terminal cable from the battery, and wait for at least 90 seconds.
(c) Disconnect the connectors from the front seat side airbag assembly RH.
(d) Connect the black wire side of SST (resistance 2.1 Ω) to the floor wire No. 2.
CAUTION:
Never connect a tester to the front seat side airbag assembly RH (side squib RH) for measurement, as this may lead to a serious injury due to airbag deployment.
NOTICE:
Do not forcibly insert the SST into the terminals of the connector when connecting.
Insert the SST straight into the terminals of the connector.
SST 09843-18060
(e) Connect the negative (-) terminal cable to the battery, and wait for at least 2 seconds.
(f) Turn the ignition switch to the ON position, and wait for at least 60 seconds.
(g) Clear the DTCs stored in memory (See page RS-35).
(h) Turn the ignition switch to the LOCK position.
(i) Turn the ignition switch to the ON position, and wait for at least 60 seconds.
(j) Check the DTCs (See page RS-35).
OK:
DTC B0110/43 is not output.
HINT:
Codes other than DTC B0110/43 may be output at this time, but they are not related to this check.

NG → **Go to step 2**

OK

REPLACE FRONT SEAT ASSEMBLY RH

2 CHECK FLOOR WIRE NO.2 (SIDE SQUIB RH CIRCUIT)

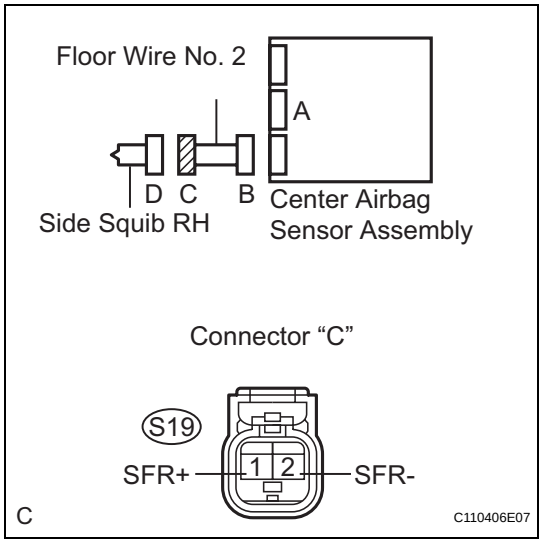

(a) Turn the ignition switch to the LOCK position.
(b) Disconnect the negative (-) terminal cable from the battery, and wait for at least 90 seconds.
(c) Disconnect the SST (resistance 2.1 Ω) from the floor wire No. 2.
(d) Disconnect the connector from the center airbag sensor assembly.
(e) Release the activation prevention mechanism built into connector "B" (See page RS-27).
(f) Measure the resistance according to the value(s) in the table below.

Standard resistance

Tester connection	Condition	Specified condition
S19-1 (SFR+) - S19-2 (SFR-)	Always	1 MΩ or higher

NG → **REPAIR OR REPLACE FLOOR WIRE NO.2**

OK

3 CHECK CENTER AIRBAG SENSOR ASSEMBLY

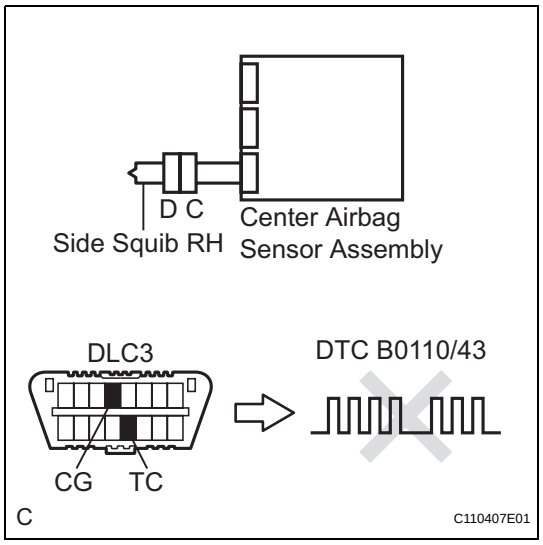

(a) Connect the connectors to the front seat side airbag assembly RH and the center airbag sensor assembly.
(b) Connect the negative (-) terminal cable to the battery, and wait for at least 2 seconds.
(c) Turn the ignition switch to the ON position, and wait for at least 60 seconds.
(d) Clear the DTCs stored in memory (See page RS-35).
(e) Turn the ignition switch to the LOCK position.
(f) Turn the ignition switch to the ON position, and wait for at least 60 seconds.
(g) Check the DTCs (See page RS-35).

OK:

DTC B0110/43 is not output.

HINT:

Codes other than code B0110/43 may be output at this time, but they are not related to this check.

NG → **REPLACE CENTER AIRBAG SENSOR ASSEMBLY**

OK

USE SIMULATION METHOD TO CHECK