DTC	B1781	Front Occupant Classification Sensor RH Circuit Malfunction

DESCRIPTION

The front occupant classification sensor RH circuit consists of the occupant classification ECU and the front occupant classification sensor RH.
DTC B1781 is recorded when a malfunction is detected in the front occupant classification sensor RH circuit.

DTC No.	DTC Detecting Condition	Trouble Area
B1781	• The occupant classification ECU receives a line short circuit signal, an open circuit signal, a short circuit to ground signal or a short circuit to B+ signal in the front occupant classification sensor RH circuit for 2 seconds. • Front occupant classification sensor RH malfunction • Occupant classification ECU malfunction	• Front seat assembly RH (Front occupant classification sensor RH) • Occupant classification ECU • Front seat wire RH

RS

WIRING DIAGRAM

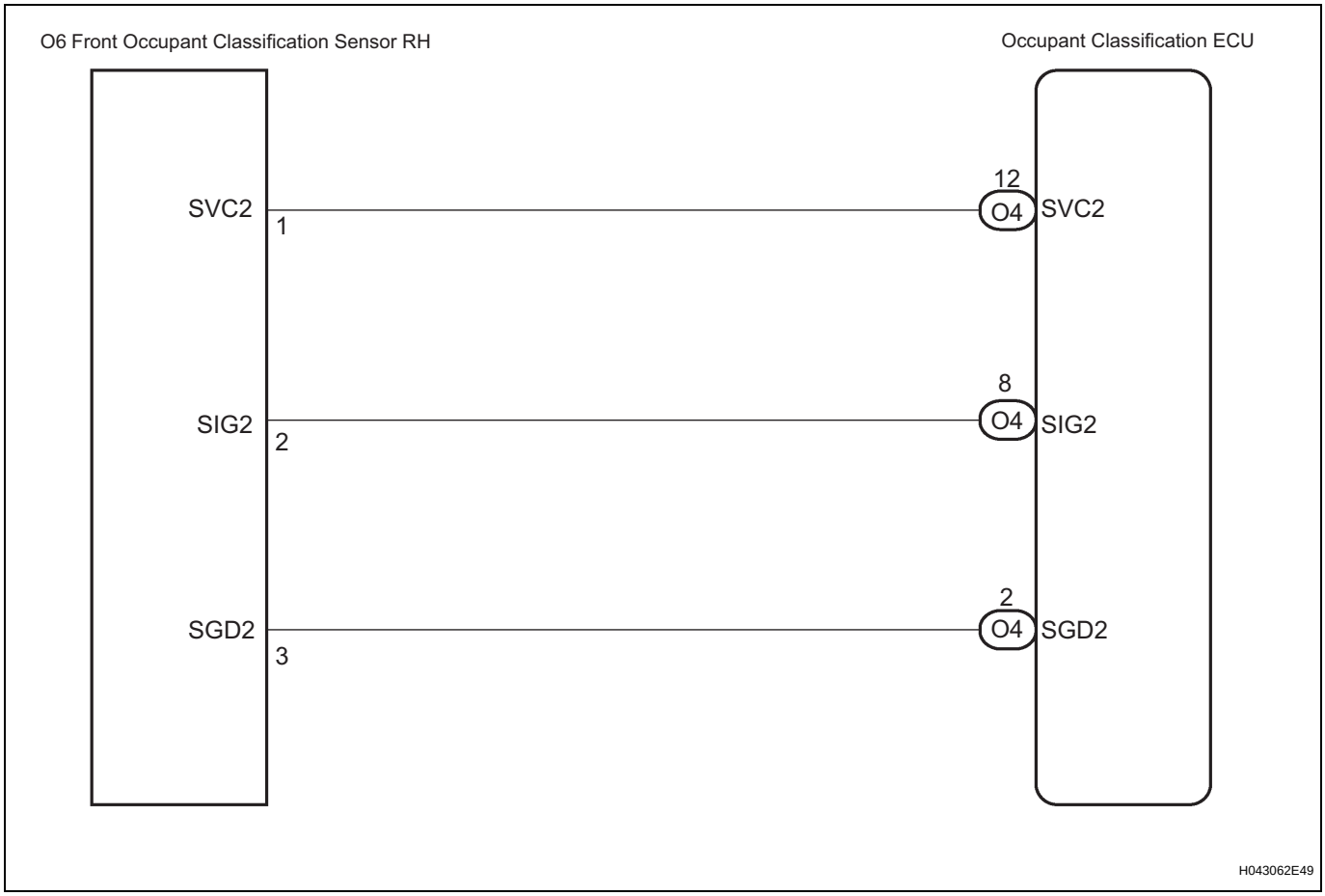

INSPECTION PROCEDURE

HINT:

- If troubleshooting (wire harness inspection) is difficult to perform, remove the front passenger seat installation bolts to see the under surface of the seat cushion.
- In the above case, hold the seat so that it does not fall down. Holding the seat for a long period of time may cause a problem, such as seat rail deformation. Hold the seat only as necessary.

1	CHECK DTC

(a) Turn the ignition switch to the ON position.
(b) Clear the DTCs stored in the memory (See page RS-335).
HINT:
First clear DTCs stored in the occupant classification ECU and then in the center airbag sensor assembly.
(c) Turn the ignition switch to the LOCK position.
(d) Turn the ignition switch to the ON position.
(e) Check the DTCs (See page RS-335).
OK:
DTC B1781 is not output.
HINT:
Codes other than DTC B1781 may be output at this time, but they are not related to this check.

OK → **USE SIMULATION METHOD TO CHECK**

NG

2	CHECK CONNECTION OF CONNECTORS

(a) Turn the ignition switch to the LOCK position.
(b) Disconnect the negative (-) terminal cable from the battery, and wait for at least 90 seconds.
(c) Check that the connectors are properly connected to the occupant classification ECU and the front occupant classification sensor RH.
OK:
The connectors are properly connected.

NG → **CONNECT CONNECTORS, THEN GO TO STEP 1**

OK

3 CHECK FRONT SEAT WIRE RH (SHORT TO B+)

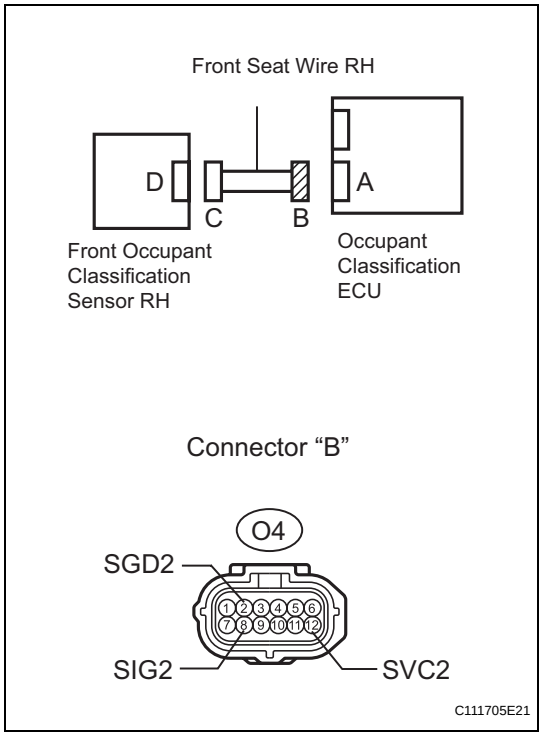

(a) Disconnect the connectors from the occupant classification ECU and the front occupant classification sensor RH.
(b) Connect the negative (-) terminal cable to the battery.
(c) Turn the ignition switch to the ON position.
(d) Measure the voltage according to the value(s) in the table below.

Standard voltage

Tester connection	Condition	Specified condition
O4-2 (SGD2) - Body ground	Ignition switch ON	Below 1 V
O4-8 (SIG2) - Body ground	Ignition switch ON	Below 1 V
O4-12 (SVC2) - Body ground	Ignition switch ON	Below 1 V

NG → **REPAIR OR REPLACE FRONT SEAT WIRE RH**

OK

4 CHECK FRONT SEAT WIRE RH (OPEN)

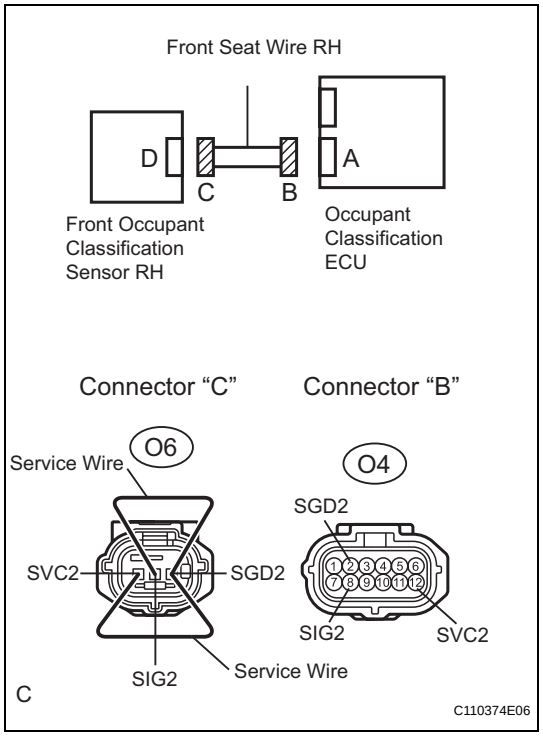

(a) Turn the ignition switch to the LOCK position.
(b) Disconnect the negative (-) terminal cable from the battery, and wait for at least 90 seconds.
(c) Using a service wire, connect O6-1 (SVC2) and O6-3 (SGD2), and connect O6-2 (SIG2) and O6-3 (SGD2) of connector "C".

NOTICE:
Do not forcibly insert a service wire into the terminals of the connector when connecting.

(d) Measure the resistance according to the value(s) in the table below.

Standard resistance

Tester connection	Condition	Specified condition
O4-8 (SIG2) - O4-2 (SGD2)	Always	Below 1 Ω
O4-12 (SVC2) - O4-2 (SGD2)	Always	Below 1 Ω

NG → **REPAIR OR REPLACE FRONT SEAT WIRE RH**

OK

5 CHECK FRONT SEAT WIRE RH (SHORT)

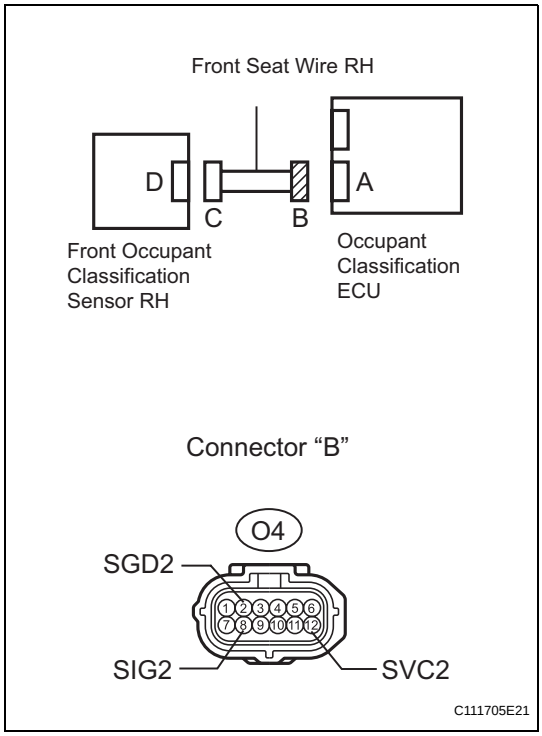

(a) Disconnect the service wire from connector "C".
(b) Measure the resistance according to the value(s) in the table below.

Standard resistance

Tester connection	Condition	Specified condition
O4-8 (SIG2) - O4-2 (SGD2)	Always	1 MΩ or higher
O4-12 (SVC2) - O4-2 (SGD2)	Always	1 MΩ or higher
O4-8 (SIG2) - O4-12 (SVC2)	Always	1 MΩ or higher

NG → **REPAIR OR REPLACE FRONT SEAT WIRE RH**

OK

6 CHECK FRONT SEAT WIRE RH (SHORT TO GROUND)

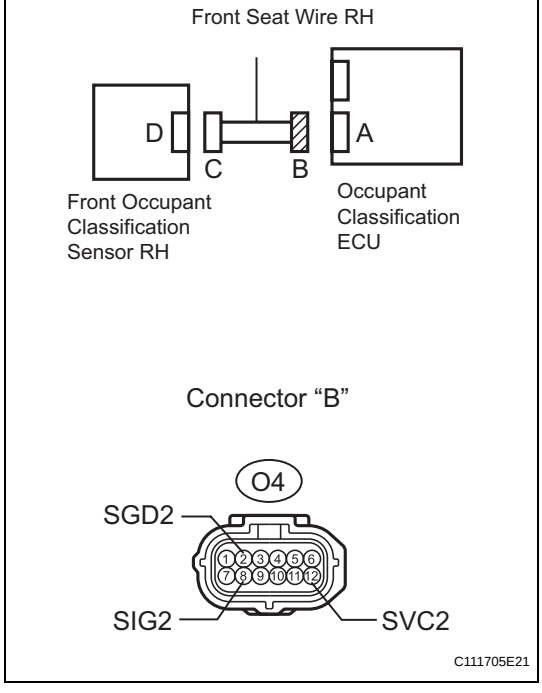

(a) Measure the resistance according to the value(s) in the table below.

Standard resistance

Tester connection	Condition	Specified condition
O4-2 (SGD2) - Body ground	Always	1 MΩ or higher
O4-8 (SIG2) - Body ground	Always	1 MΩ or higher
O4-12 (SVC2) - Body ground	Always	1 MΩ or higher

NG → **REPAIR OR REPLACE FRONT SEAT WIRE RH**

OK

7	CHECK DTC

(a) Connect the connectors to the occupant classification ECU and the front occupant classification sensor RH.
(b) Connect the negative (-) terminal cable to the battery.
(c) Turn the ignition switch to the ON position.
(d) Clear the DTCs stored in the memory (See page RS-335).
HINT:
First clear DTCs stored in the occupant classification ECU and then in the center airbag sensor assembly.
(e) Turn the ignition switch to the LOCK position.
(f) Turn the ignition switch to the ON position.
(g) Check the DTCs (See page RS-335).
OK:
DTC B1781 is not output.
HINT:
Codes other than DTC B1781 may be output at this time, but they are not related to this check.

OK	USE SIMULATION METHOD TO CHECK

NG

8	REPLACE OCCUPANT CLASSIFICATION ECU

(a) Turn the ignition switch to the LOCK position.
(b) Disconnect the negative (-) terminal cable from the battery, and wait for at least 90 seconds.
(c) Replace the occupant classification ECU (See page RS-487).
HINT:
Perform the inspection using parts from a normal vehicle if possible.

NEXT

9	PERFORM ZERO POINT CALIBRATION

(a) Connect the negative (-) terminal cable to the battery.
(b) Connect the intelligent tester to the DLC3.
(c) Turn the ignition switch to the ON position.
(d) Using the intelligent tester, perform "Zero point calibration" (See page RS-328).
OK:
"COMPLETED" is displayed.

NG	Go to step 12

OK

10	PERFORM SENSITIVITY CHECK

(a) Using the intelligent tester, perform "Sensitivity check" (See page RS-328).
Standard value:
27 to 33 kg (59.52 to 72.75 lb)

NG → **Go to step 12**

OK

11	CHECK DTC

(a) Turn the ignition switch to the ON position.
(b) Clear the DTCs stored in the memory (See page RS-335).
HINT:
First clear DTCs stored in the occupant classification ECU and then in the center airbag sensor assembly.
(c) Turn the ignition switch to the LOCK position.
(d) Turn the ignition switch to the ON position.
(e) Check the DTCs (See page RS-335).
OK:
DTC B1781 is not output.
HINT:
Codes other than DTC B1781 may be output at this time, but they are not related to this check.

OK → **END**

NG

12	REPLACE FRONT SEAT ASSEMBLY RH

(a) Turn the ignition switch to the LOCK position.
(b) Disconnect the negative (-) terminal cable from the battery, and wait for at least 90 seconds.
(c) Replace the front seat assembly RH (See page SE-40 for flat type, SE-48 for manual seat, SE-58 for power seat).

NEXT

13	PERFORM ZERO POINT CALIBRATION

(a) Connect the negative (-) terminal cable to the battery.
(b) Connect the intelligent tester to the DLC3.
(c) Turn the ignition switch to the ON position.
(d) Using the intelligent tester, perform "Zero point calibration" (See page RS-328).
OK:
"COMPLETED" is displayed.

NEXT

14	PERFORM SENSITIVITY CHECK

(a) Using the intelligent tester, perform "Sensitivity check" (See page RS-328).
Standard value:
27 to 33 kg (59.52 to 72.75 lb)

NEXT

END