DTC	B1149/37	Front Airbag Sensor LH Circuit Malfunction

DESCRIPTION

The front airbag sensor LH circuit consists of the center airbag sensor assembly and front airbag sensor LH.

If the center airbag sensor assembly receives signals from the front airbag sensor LH, it judges whether or not the SRS should be activated.

DTC B1149/37 is recorded when a malfunction is detected in the front airbag sensor LH circuit.

DTC No.	DTC Detecting Condition	Trouble Area
B1149/37	• Open circuit in +SL wire harness or -SL wire harness of front airbag sensor LH circuit • Front airbag sensor LH malfunction • Center airbag sensor assembly malfunction	• Front airbag sensor LH • Center airbag sensor assembly • Engine room main wire • Instrument panel wire

RS

WIRING DIAGRAM

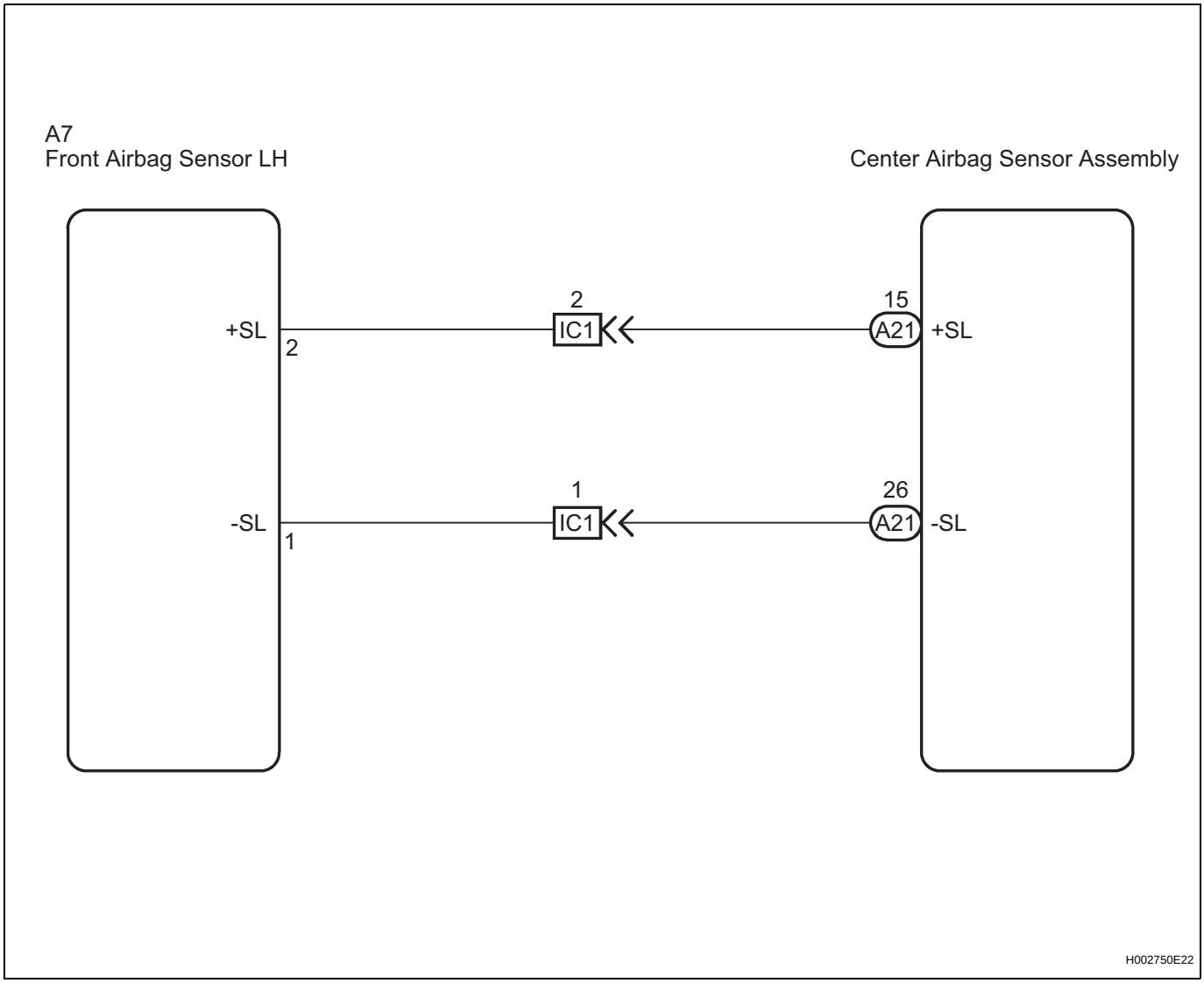

INSPECTION PROCEDURE

1	CHECK DTC

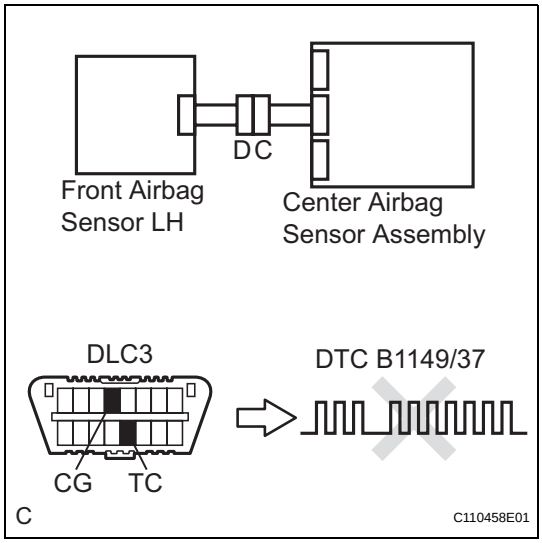

(a) Turn the ignition switch to the ON position, and wait for at least 60 seconds.
(b) Clear the DTCs stored in memory (See page RS-35).
(c) Turn the ignition switch to the LOCK position.
(d) Turn the ignition switch to the ON position, and wait for at least 60 seconds.
(e) Check the DTCs (See page RS-35).

OK:

DTC B1149/37 is not output.

HINT:

Codes other than DTC B1149/37 may be output at this time, but they are not related to this check.

NG → **Go to step 2**

OK

USE SIMULATION METHOD TO CHECK

2	CHECK CONNECTION OF CONNECTORS

(a) Turn the ignition switch to the LOCK position.
(b) Disconnect the negative (-) terminal cable from the battery, and wait for at least 90 seconds.
(c) Check that the connectors are properly connected to the center airbag sensor assembly and the front airbag sensor LH.

OK:

The connectors are connected.

NG → **CONNECT CONNECTORS**

OK

3 CHECK FRONT AIRBAG SENSOR LH CIRCUIT (OPEN)

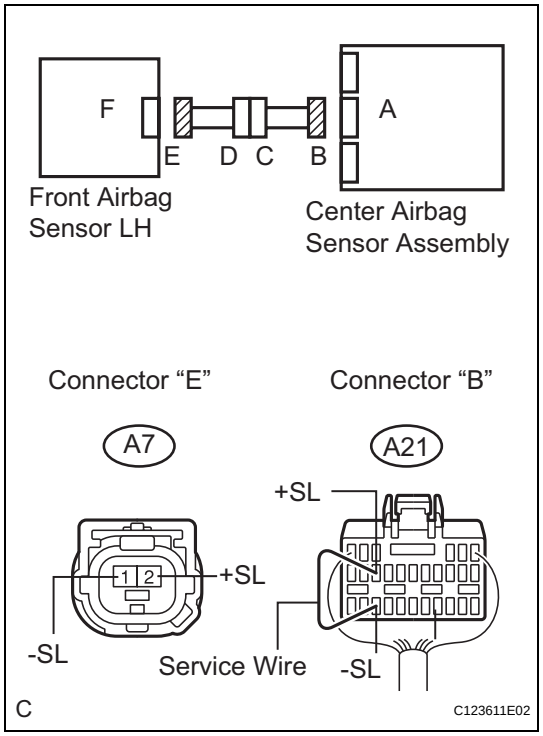

(a) Disconnect the connectors from the center airbag sensor assembly and the front airbag sensor LH.
(b) Using a service wire, connect A21-15 (+SL) and A21-26 (-SL) of connector "B".
NOTICE:
Do not forcibly insert a service wire into the terminals of the connector when connecting.
(c) Measure the resistance according to the value(s) in the table below.
Standard resistance

Tester connection	Condition	Specified condition
A7-2 (+SL) - A7-1 (-SL)	Always	Below 1 Ω

NG → **Go to step 5**

OK

4 CHECK FRONT AIRBAG SENSOR LH

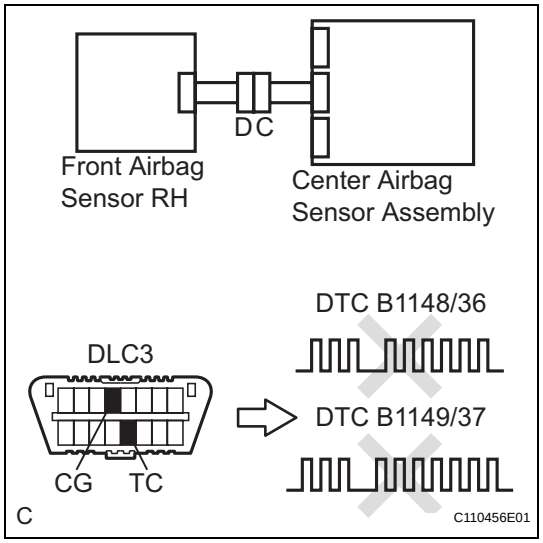

(a) Disconnect the service wire from connector "B".
(b) Connect the connector to the center airbag sensor assembly.
(c) Interchange the front airbag sensor RH with LH and connect the connectors to them.
(d) Connect the negative (-) terminal cable to the battery, and wait for at least 2 seconds.
(e) Turn the ignition switch to the ON position, and wait for at least 60 seconds.
(f) Clear the DTCs stored in memory (See page RS-35).
(g) Turn the ignition switch to the LOCK position.
(h) Turn the ignition switch to the ON position, and wait for at least 60 seconds.
(i) Check the DTCs (See page RS-35).
Result

Result	Proceed To
DTC B1148/36 and B1149/37 are not output.	A
DTC B1148/36 is output.	B
DTC B1149/37 is output.	C

HINT:
Codes other than DTC B1148/36 and B1149/37 may be output at this time, but they are not related to this check.

B → REPLACE FRONT AIRBAG SENSOR LH

C → REPLACE CENTER AIRBAG SENSOR ASSEMBLY

A

USE SIMULATION METHOD TO CHECK

RS

5 CHECK INSTRUMENT PANEL WIRE (OPEN)

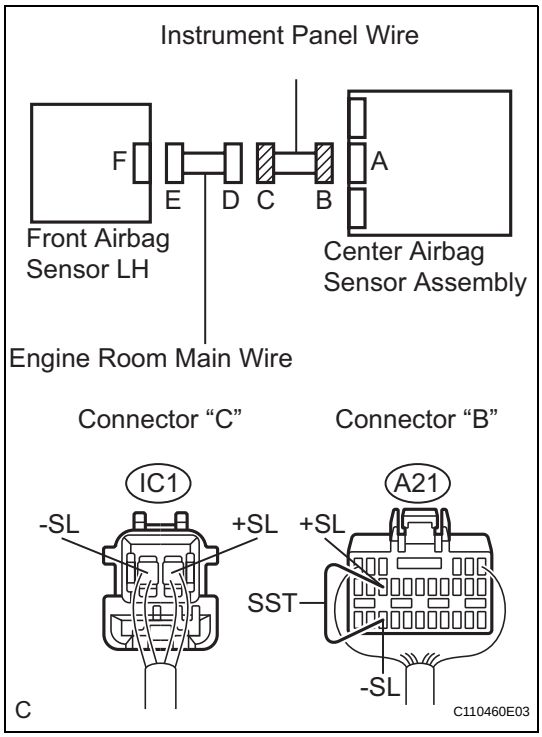

(a) Disconnect the instrument panel wire connector from the engine room main wire.
HINT:
The service wire has already been inserted into connector "B".

(b) Measure the resistance according to the value(s) in the table below.

Standard resistance

Tester connection	Condition	Specified condition
IC1-2 (+SL) - IC1-1 (-SL)	Always	Below 1 Ω

NG → REPAIR OR REPLACE INSTRUMENT PANEL WIRE

OK

REPAIR OR REPLACE ENGINE ROOM MAIN WIRE