SPIRAL CABLE

COMPONENTS

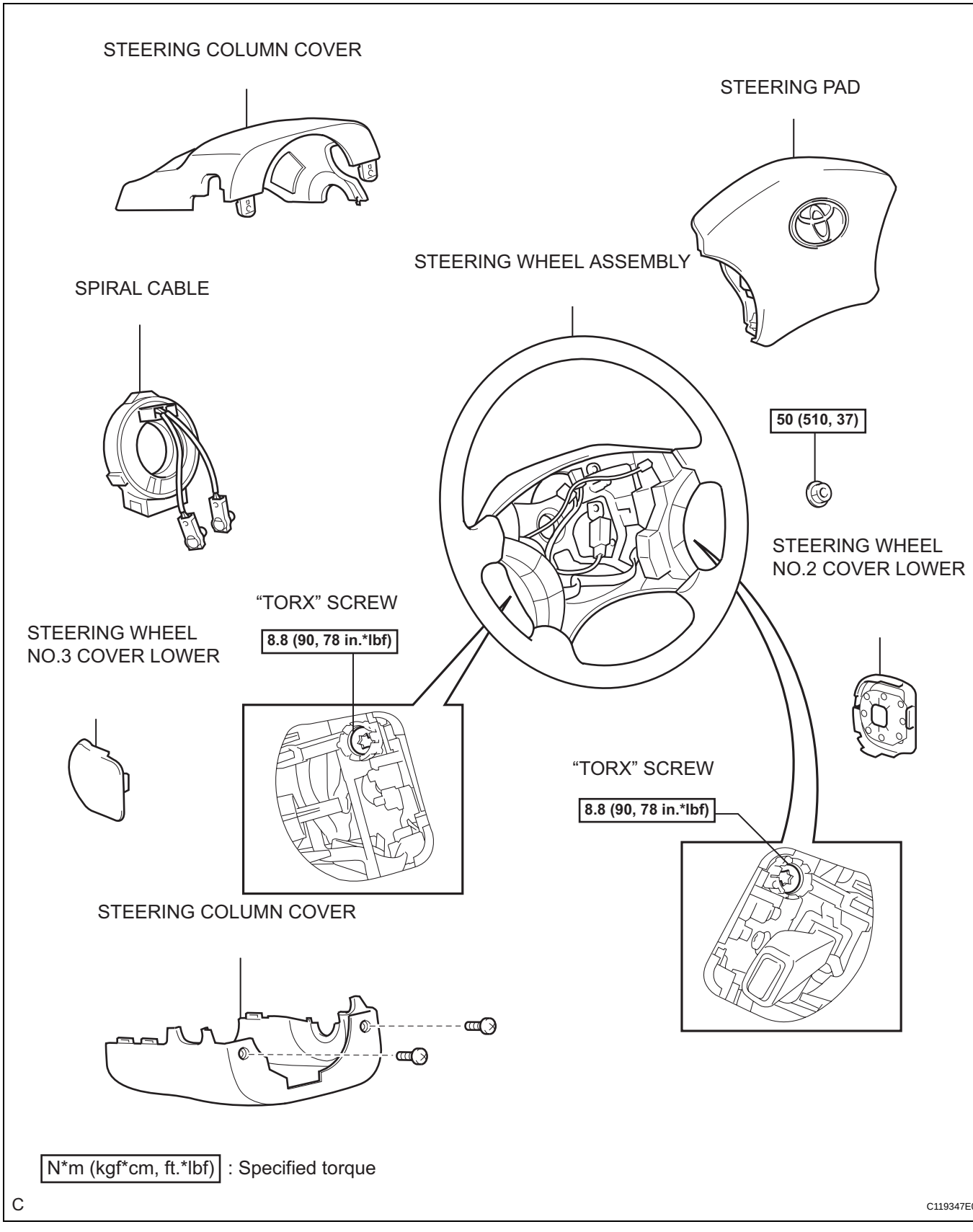

REMOVAL

1. **PRECAUTION**
   CAUTION:
   Be sure to read "PRECAUTION" thoroughly before servicing (See page RS-1).
2. **DISCONNECT CABLE FROM NEGATIVE BATTERY TERMINAL**
   CAUTION:
   Wait for 90 seconds after disconnecting the cable to prevent the airbag working.
3. **PLACE FRONT WHEELS FACING STRAIGHT AHEAD**
4. **REMOVE STEERING WHEEL NO.3 COVER LOWER (See page RS-424)**
5. **REMOVE STEERING WHEEL NO.2 COVER LOWER (See page RS-424)**
6. **REMOVE STEERING PAD (See page RS-424)**
7. **REMOVE STEERING WHEEL ASSEMBLY**
8. **REMOVE STEERING COLUMN COVER**
   (a) Remove the 2 screws and the steering column cover.

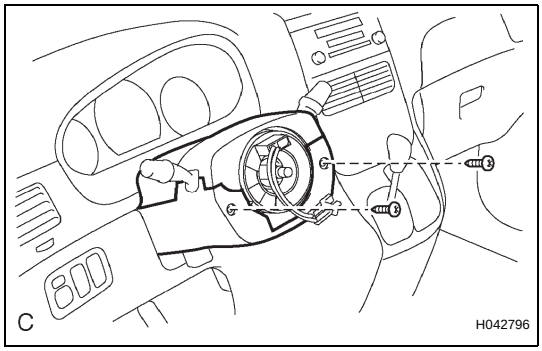

9. **REMOVE SPIRAL CABLE**
   (a) Disconnect the connectors from the spiral cable.
   NOTICE:
   When handling the airbag connector, take care not to damage the airbag wire harness.

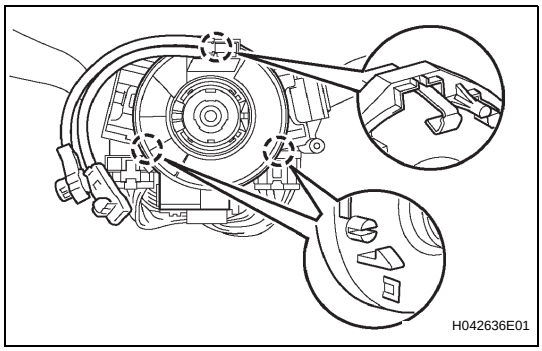

   (b) Disengage the 3 claws and remove the spiral cable.