INSPECTION

1. INSPECT SPIRAL CABLE

(a) If there are any defects as mentioned below, replace the spiral cable with a new one:
Scratches, cracks, dents or chips on the connector or the spiral cable.

INSTALLATION

1. INSTALL SPIRAL CABLE

(a) Check that the front wheels are facing straight ahead.

(b) Set the turn signal switch to the neutral position.
NOTICE:
If it is not in the neutral position, the pin of the turn signal switch may snap.

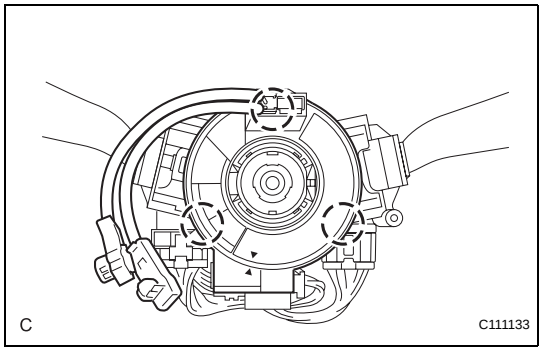

(c) Install the spiral cable.
NOTICE:
When replacing the spiral cable with a new one, remove the lock pin before installing the steering wheel assembly.

(d) Connect the connectors to the spiral cable.
NOTICE:
When handling the airbag connector, take care not to damage the airbag wire harness.

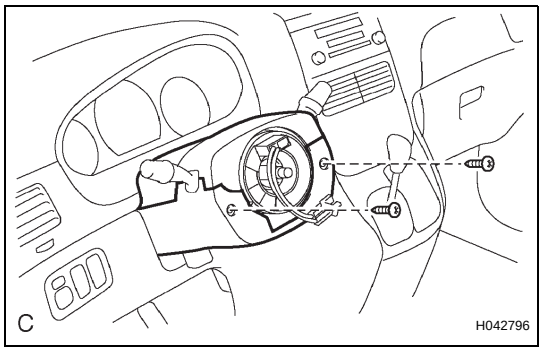

2. INSTALL STEERING COLUMN COVER

(a) Install the steering column cover with the 2 screws.

3. ADJUST SPIRAL CABLE

(a) Check that the ignition switch is off.

(b) Check that the battery negative (-) terminal is disconnected.
CAUTION:
After removing the terminal, wait for at least 90 seconds before starting the operation.

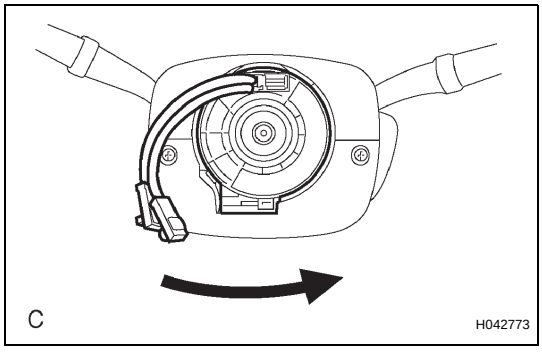

(c) Rotate the spiral cable counterclockwise slowly by hand until it feels firm.
NOTICE:
Do not turn the spiral cable by the airbag wire harness.

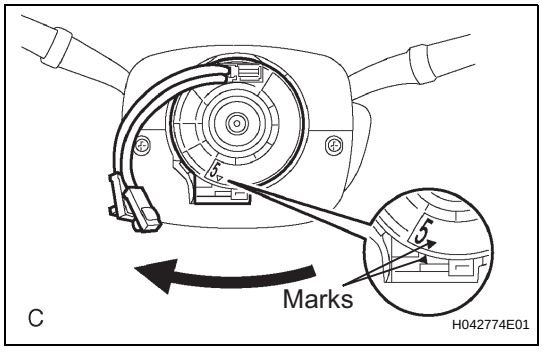

(d) Rotate the spiral cable clockwise approximately 2.5 turns to align the marks.
NOTICE:
Do not turn the spiral cable by the airbag wire harness.
HINT:
The spiral cable will rotate approximately 2.5 turns to both the left and right from the center.

4. INSTALL STEERING WHEEL ASSEMBLY

5. INSPECT STEERING WHEEL CENTER POINT

6. INSTALL STEERING PAD (See page RS-424)

7. **INSTALL STEERING WHEEL NO.2 COVER LOWER (See page RS-425)**

8. **INSTALL STEERING WHEEL NO.3 COVER LOWER (See page RS-425)**

9. **CONNECT CABLE TO NEGATIVE BATTERY TERMINAL**

10. **INSPECT STEERING PAD (See page RS-425)**

11. **PERFORM INITIALIZATION**
    (a) Perform initialization.
    HINT:
    Some systems need initialization when disconnecting the cable from the negative battery terminal.

12. **INSPECT SRS WARNING LIGHT**
    (a) Inspect the SRS warning light (See page RS-27).