REMOVAL

1. **PRECAUTION**
   CAUTION:
   Be sure to read "PRECAUTION" thoroughly before servicing (See page RS-1).
2. **DISCONNECT CABLE FROM NEGATIVE BATTERY TERMINAL**
   CAUTION:
   Wait for 90 seconds after disconnecting the cable to prevent the airbag working.
3. **PLACE FRONT WHEELS FACING STRAIGHT AHEAD**
4. **REMOVE STEERING WHEEL NO.3 COVER LOWER (See page RS-424)**
5. **REMOVE STEERING WHEEL NO.2 COVER LOWER (See page RS-424)**
6. **REMOVE STEERING PAD (See page RS-424)**
7. **REMOVE STEERING WHEEL ASSEMBLY (See page SR-6)**
8. **REMOVE STEERING COLUMN COVER (See page SR-6)**
9. **REMOVE GLOVE COMPARTMENT DOOR ASSEMBLY (See page IP-7)**
10. **REMOVE INSTRUMENT PANEL BOX NO.2 (See page IP-7)**
11. **DISCONNECT FRONT PASSENGER AIRBAG ASSEMBLY CONNECTOR**
    (a) Disconnect the connector from the front passenger airbag assembly.
    NOTICE:
    When handling the airbag connector, take care not to damage the airbag wire harness.
12. **REMOVE INSTRUMENT PANEL SUB-ASSEMBLY (See page IP-11)**

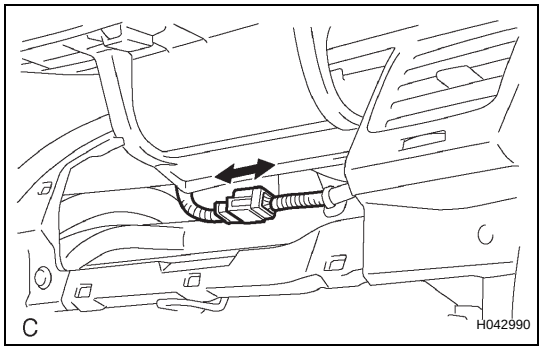

13. **REMOVE FRONT PASSENGER AIRBAG ASSEMBLY**
    (a) Remove the 2 screws.

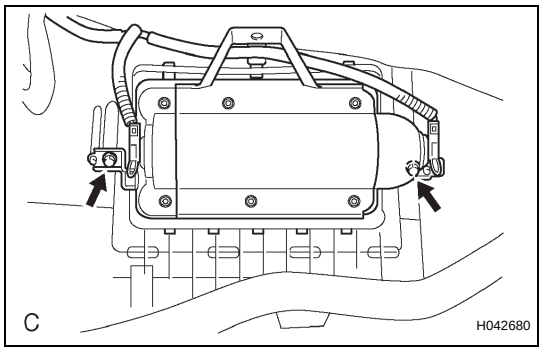

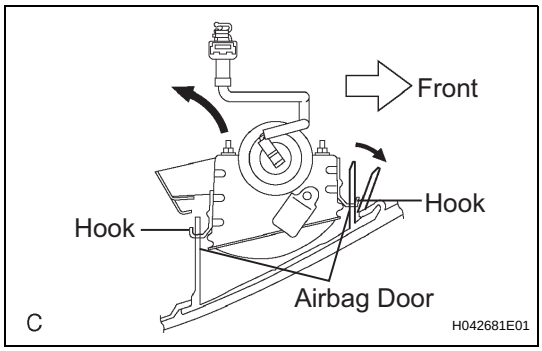

(b) Release the front side wall of the airbag door from the hook by slightly deflecting it and roll the front passenger airbag assembly rearward.
(c) Release the rear side wall of the airbag door from the other hook and remove the front passenger airbag assembly.

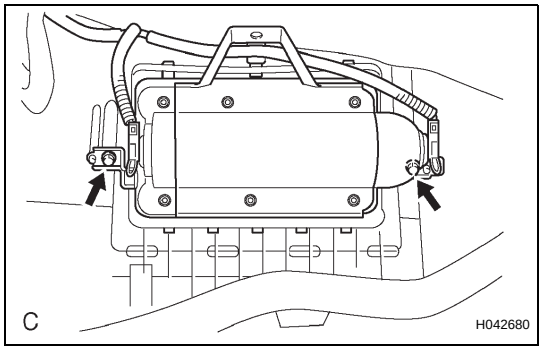

INSTALLATION

1. INSTALL FRONT PASSENGER AIRBAG ASSEMBLY
(a) Install the front passenger airbag assembly with the 2 screws.

2. INSTALL INSTRUMENT PANEL SUB-ASSEMBLY
(See page IP-14)

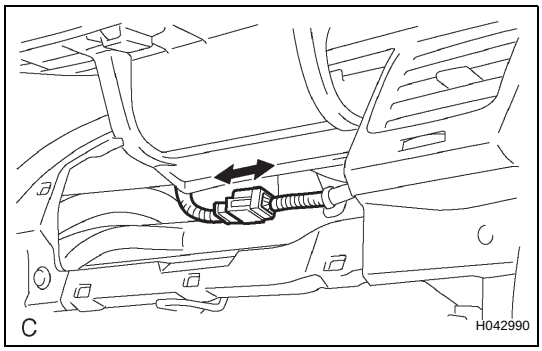

3. CONNECT FRONT PASSENGER AIRBAG ASSEMBLY CONNECTOR
(a) Connect the connector to the front passenger airbag assembly.
NOTICE:
When handling the airbag connector, take care not to damage the airbag wire harness.

4. INSTALL INSTRUMENT PANEL BOX NO.2
HINT:
(See page IP-15)

5. INSTALL GLOVE COMPARTMENT DOOR ASSEMBLY
HINT:
(See page IP-15)

6. INSTALL STEERING COLUMN COVER
HINT:
(See page IP-16)

7. INSTALL STEERING WHEEL ASSEMBLY
HINT:
(See page SR-11)

8. INSPECT STEERING WHEEL CENTER POINT

9. INSTALL STEERING PAD
HINT:
(See page RS-424)

10. INSTALL STEERING WHEEL NO.2 COVER LOWER
HINT:
(See page RS-425)

11. INSTALL STEERING WHEEL NO.3 COVER LOWER
HINT:
(See page RS-425)

12. PLACE FRONT WHEELS FACING STRAIGHT AHEAD

13. CONNECT CABLE TO NEGATIVE BATTERY TERMINAL

14. PERFORM INITIALIZATION

(a) Perform initialization.

HINT:

Some systems need initialization when disconnecting the cable from the negative battery terminal.

15. INSPECT SRS WARNING LIGHT

(a) Inspect the SRS warning light (See page RS-27).