RS

DISPOSAL

HINT:
When scrapping a vehicle equipped with the SRS or disposing of the front passenger airbag assembly, be sure to deploy the airbag first in accordance with the procedure described below. If any abnormality occurs with airbag deployment, contact the SERVICE DEPT. of the TOYOTA MOTOR SALES, U.S.A., INC.

CAUTION:

- **Never dispose of a front passenger airbag assembly that has an undeployed airbag.**
- **The airbag produces an exploding sound when it is deployed, so perform the operation outdoors and where it will not create a nuisance to nearby residents.**
- **When deploying the airbag, always use the specified SST (SRS Airbag Deployment Tool). Perform the operation in a place away from electrical noise.**
- **When deploying the airbag, perform the operation at least 10 m (33 ft) away from the front passenger airbag assembly.**
- **The front passenger airbag assembly becomes extremely hot when the airbag is deployed, so do not touch it for at least 30 minutes after deployment.**
- **Use gloves and safety glasses when handling a front passenger airbag assembly with a deployed airbag.**
- **Do not apply water, etc. to a front passenger airbag assembly with a deployed airbag.**
- **Always wash your hands with water after completing the operation.**

1. DISPOSE OF FRONT PASSENGER AIRBAG ASSEMBLY (WHEN INSTALLED IN VEHICLE)

HINT:
Prepare a battery as the power source to deploy the airbag.

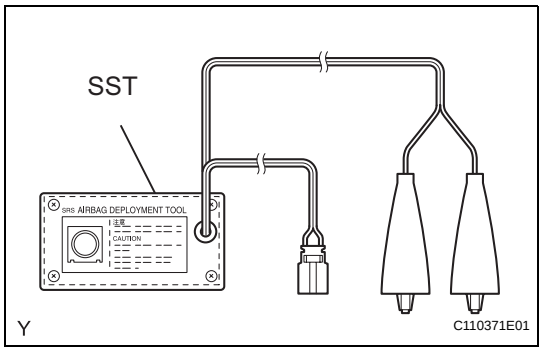

(a) Check the function of the SST (See page RS-425).
(b) Precaution (See page RS-1).
(c) Disconnect the cable from the negative battery terminal.
CAUTION:
Wait for 90 seconds after disconnecting the cable to prevent the airbag working.
(d) Remove the instrument panel box No. 2 (See page IP-7).
(e) Remove the glove compartment door assembly (See page IP-7).

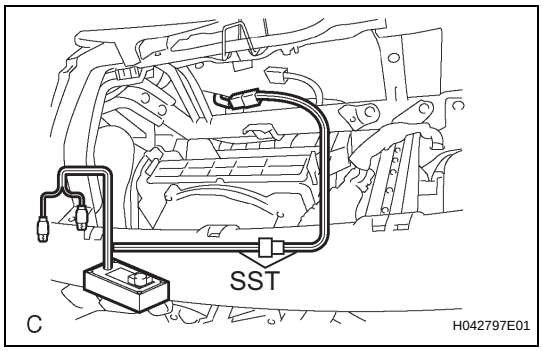

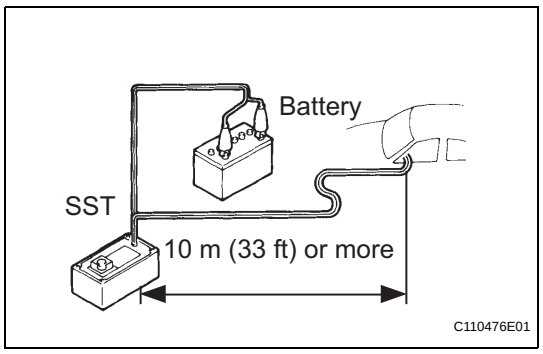

(f) Install the SST.
  (1) Disconnect the connector from the front passenger airbag assembly.
  NOTICE:
  When handling the airbag connector, take care not to damage the airbag wire harness.
  (2) Connect the SST connector to the front passenger airbag assembly.
  SST 09082-00700, 09082-00780
  NOTICE:
  To avoid damaging the SST connector and wire harness, do not lock the secondary lock of the twin lock.
  (3) Move the SST at least 10 m (33 ft) away from the vehicle front side window.
  (4) Maintaining enough clearance for the SST wire harness in the front side window, close all doors and windows of the vehicle.
  NOTICE:
  Take care not to damage the SST wire harness.
  (5) Connect the red clip of the SST to the battery positive (+) terminal and the black clip of the SST to the negative (-) terminal.

(g) Deploy the airbag.
  (1) Check that no one is inside the vehicle or within a 10 m (33 ft) radius of the vehicle.
  (2) Press the SST activation switch and deploy the airbag.
  CAUTION:
  - **When deploying the airbag, make sure that no one is near the vehicle.**
  - **The front passenger airbag assembly becomes extremely hot when the airbag is deployed, so do not touch it for at least 30 minutes after deployment.**
  - **Use gloves and safety glasses when handling a front passenger airbag assembly with a deployed airbag.**
  - **Do not apply water, etc. to a front passenger airbag assembly with a deployed airbag.**
  - **Always wash your hands with water after completing the operation.**

  HINT:
  The airbag is deployed as the LED of the SST activation switch comes on.

2. DISPOSE OF FRONT PASSENGER AIRBAG ASSEMBLY (WHEN NOT INSTALLED IN VEHICLE)
NOTICE:
- **When disposing of the front passenger airbag assembly, never use the customer's vehicle to deploy the airbag.**

RS

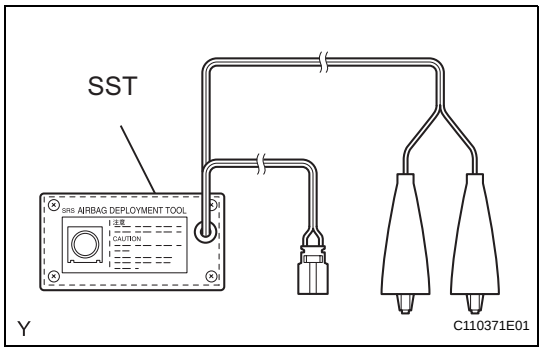

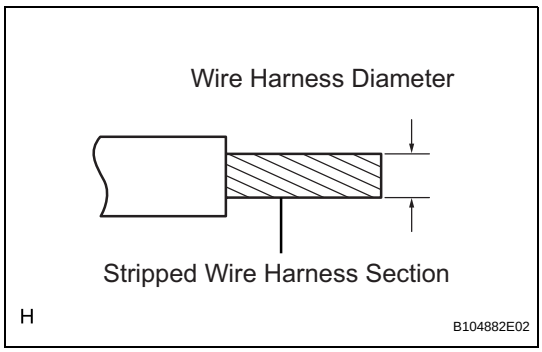

- **Be sure to follow the procedure detailed below when deploying the airbag.**

HINT:
Prepare a battery as the power source to deploy the airbag.

(a) Check the function of the SST (See page RS-425).

(b) Remove the front passenger airbag assembly (See page RS-438).

CAUTION:
- **When removing the front passenger airbag assembly, work must be started 90 seconds after the ignition switch is turned to the "LOCK" position and the negative (-) terminal cable is disconnected from the battery.**
- **When storing the front passenger airbag assembly, keep the airbag deployment side facing upward.**

(c) Using a service-purpose wire harness for the vehicle, tie down the front passenger airbag assembly to the tire.

Wire harness:

Stripped wire harness section:

1.25 mm^2 or more (0.0019 $in.^2$ or more)

CAUTION:

If the wire harness is too thin or an alternative object is used to tie down the front passenger airbag assembly, it may be snapped by the shock when the airbag is deployed. Always use a wire harness for vehicle use with an area of at least 1.25 mm^2 (0.0019 $in.^2$).

HINT:
To calculate the area of the stripped wire harness section:

Area = 3.14 x $(Diameter)^2$ divided by 4

(1) Position the front passenger airbag assembly inside the tire with the airbag deployment side facing inside.

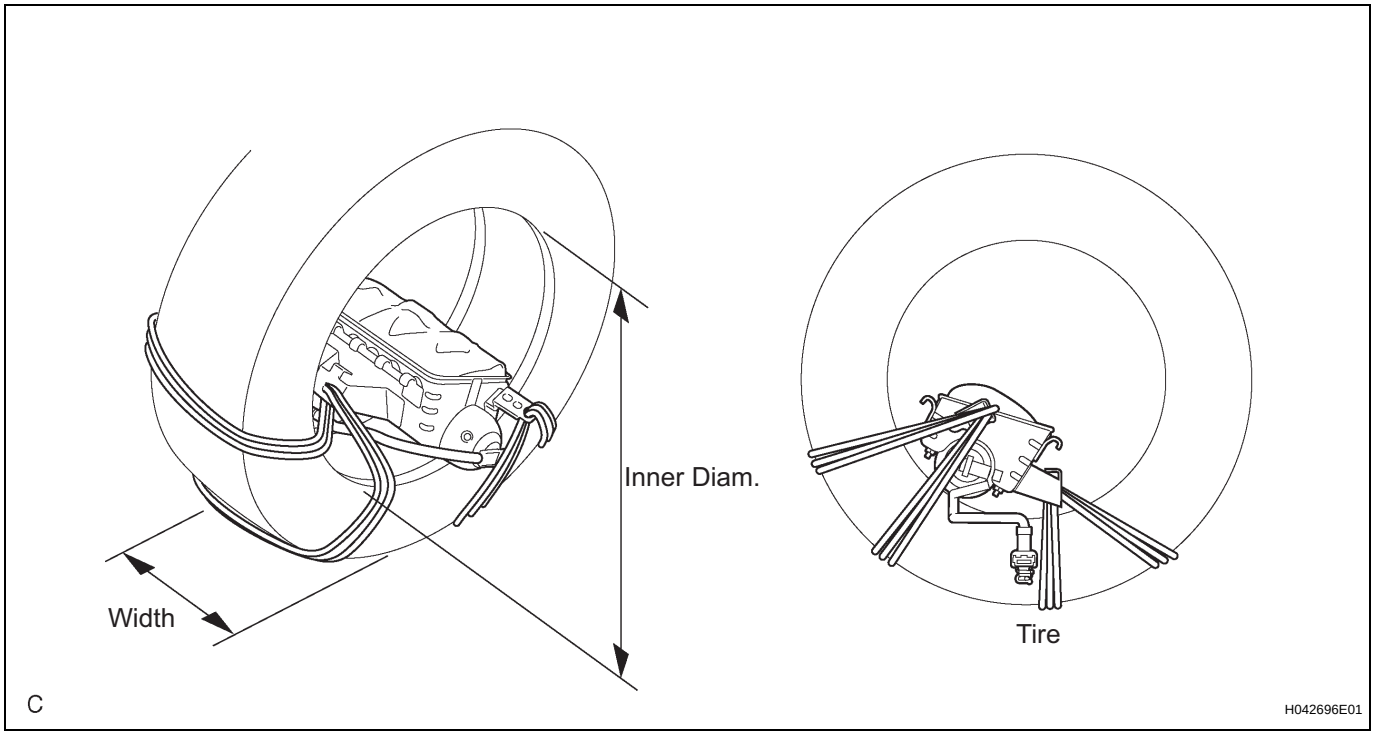

Tire size:
Must exceed the following dimensions
Width:
185 mm (7.28 in.)
Inner diameter:
360 mm (14.17 in.)
CAUTION:
- **Make sure that the wire harness is tight. If there is slack in the wire harness, the front passenger airbag assembly may become loose due to the shock when the airbag is deployed.**
- **Always tie down the front passenger airbag assembly with the airbag deployment side facing inside the tire.**

NOTICE:
The tire will be damaged by airbag deployment, so use an extra tire.

(d) Install the SST.
(1) Connect the SST connector to the front passenger airbag assembly.
SST 09082-00700, 09082-00780

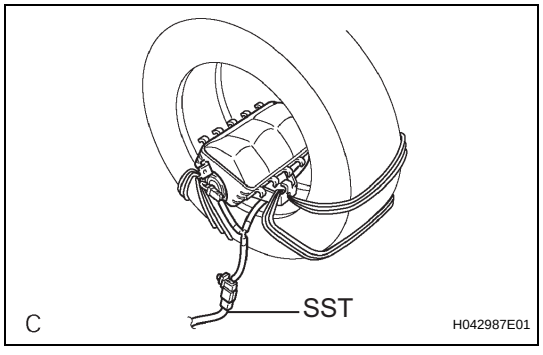

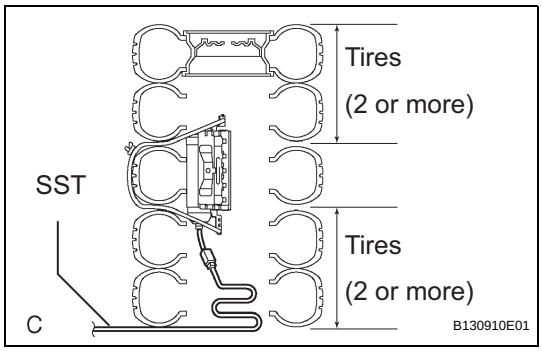

(e) Place the tires.
(1) Place at least 2 tires under the tire which the front passenger airbag assembly is tied to.
(2) Place at least 2 tires over the tire which the front passenger airbag assembly is tied to. The top tire should have a disc wheel installed.
NOTICE:
Do not place the SST connector under the tire because it could be damaged.

RS

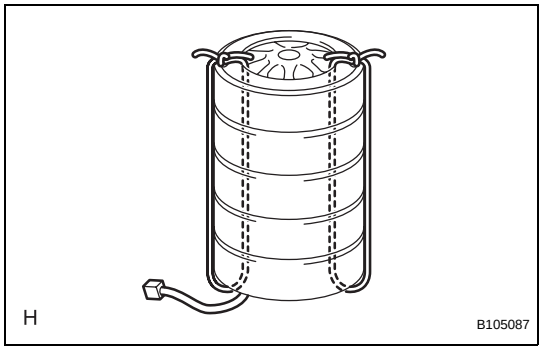

(3) Tie the tires together with 2 wire harnesses.
CAUTION:
Make sure that the wire harness is tight. Looseness in the wire harness results in the tires coming free due to the shock when the airbag is deployed.

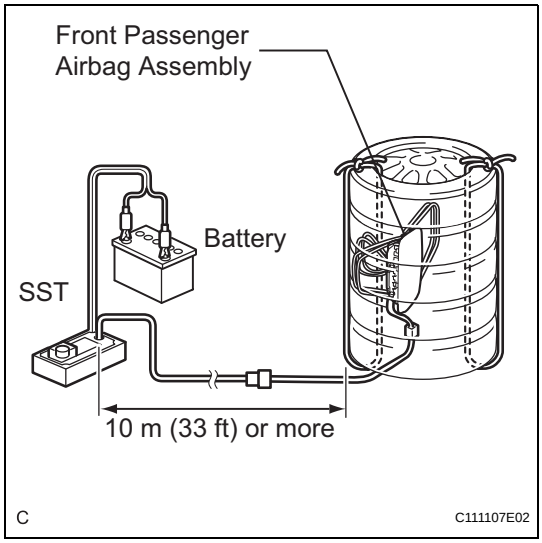

(f) Install the SST.
(1) Connect the SST connector.
SST 09082-00700
NOTICE:
To avoid damaging the SST connector and wire harness, do not lock the secondary lock of the twin lock. Also, secure some slack for the SST wire harness inside the tire.
(2) Move the SST at least 10 m (33 ft) away from the airbag tied down to the tires.

(g) Deploy the airbag.
(1) Connect the red clip of the SST to the battery positive (+) terminal and the black clip of the SST to the negative (-) terminal.
(2) Check that no one is within a 10 m (33 ft) radius of the tire which the front passenger airbag assembly is tied to.
(3) Press the SST activation switch and deploy the airbag.
CAUTION:
When deploying the airbag, make sure that no one is near the tire.
HINT:
The airbag is deployed as the LED of the SST activation switch comes on.

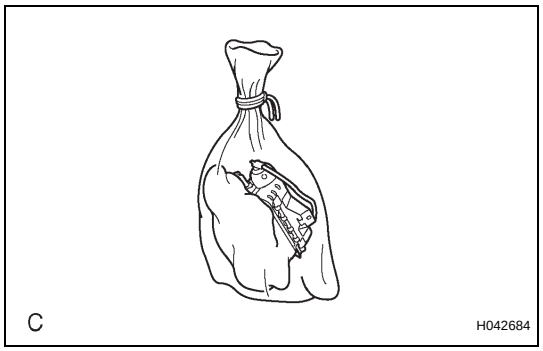

(h) Dispose of the front passenger airbag assembly.
CAUTION:
- **The front passenger airbag assembly becomes extremely hot when the airbag is deployed, so do not touch it for at least 30 minutes after deployment.**
- **Use gloves and safety glasses when handling a front passenger airbag assembly with a deployed airbag.**
- **Do not apply water, etc. to a front passenger airbag assembly with a deployed airbag.**
- **Always wash your hands with water after completing the operation.**

(1) Remove the front passenger airbag assembly from the tire.
(2) Place the front passenger airbag assembly in a plastic bag, tie it tightly and dispose of it as other general part disposal.