FRONT PASSENGER AIRBAG ASSEMBLY

COMPONENTS

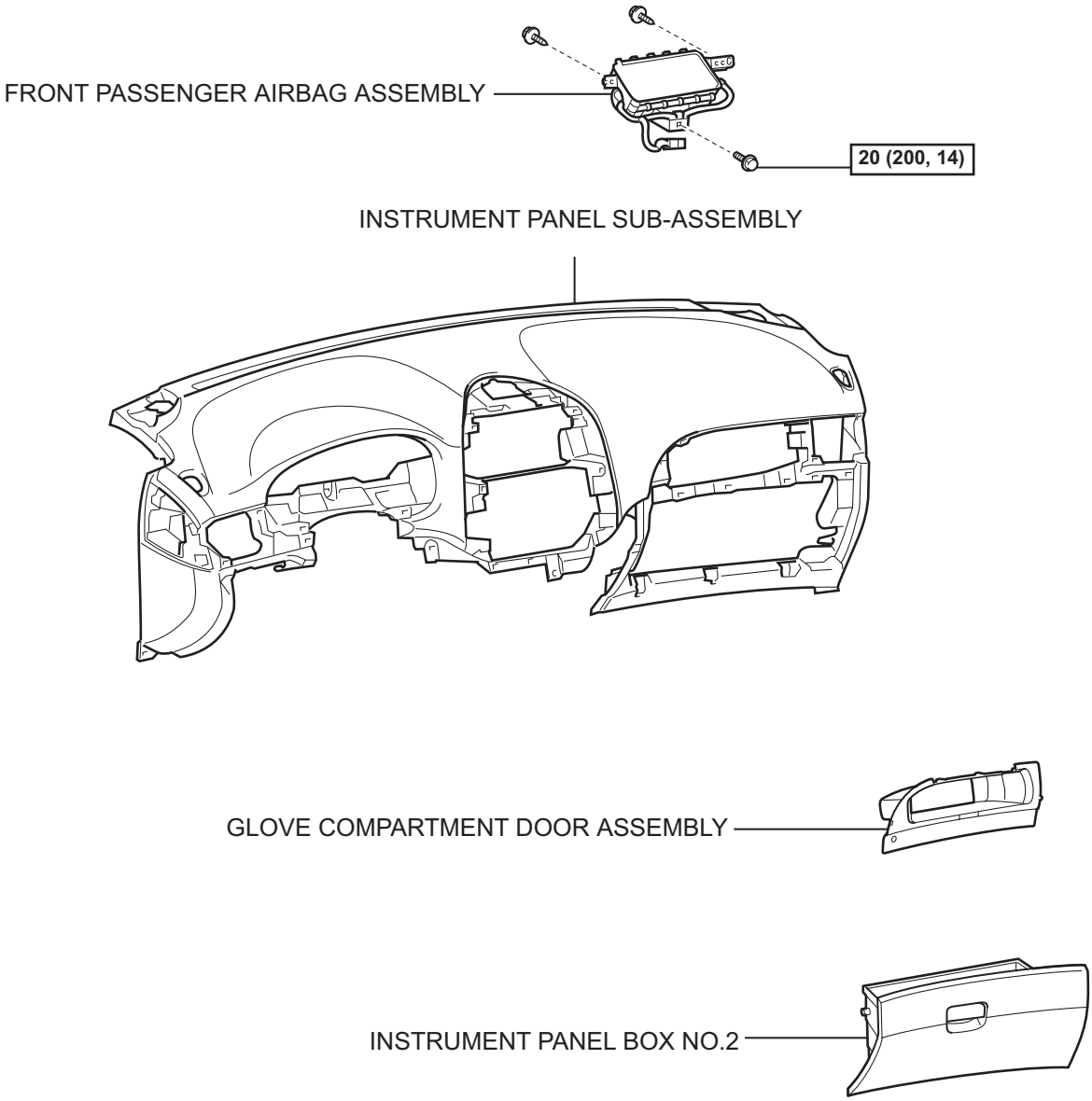

N*m (kgf*cm, ft.*lbf) : Specified torque

C

C119349E01

RS

ON-VEHICLE INSPECTION

1. INSPECT FRONT PASSENGER AIRBAG ASSEMBLY (VEHICLE NOT INVOLVED IN COLLISION)

(a) Perform a diagnostic system check (See page RS-27).

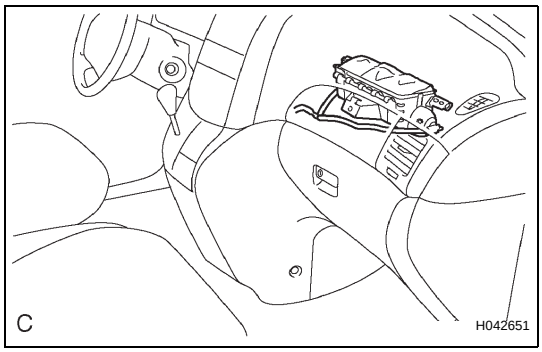

(b) With the front passenger airbag assembly installed on the vehicle, perform a visual check. If there are any defects as mentioned below, replace the instrument panel with a new one:
Cuts, minute cracks or marked discoloration on the instrument panel around the front passenger airbag assembly.

2. INSPECT FRONT PASSENGER AIRBAG ASSEMBLY (VEHICLE INVOLVED IN COLLISION AND AIRBAG HAS NOT DEPLOYED)

(a) Perform a diagnostic system check (See page RS-27).

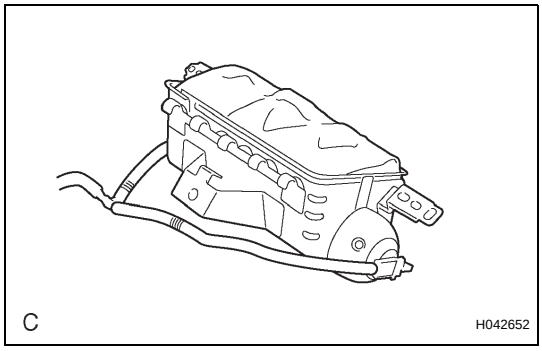

(b) With the front passenger airbag assembly removed from the vehicle, perform a visual check. If there are any defects as mentioned below, replace the front passenger airbag assembly, instrument panel or instrument panel reinforcement with a new one:
- Cuts, minute cracks or marked discoloration on the front passenger airbag assembly.
- Cracks or other damage to the connectors.
- Deformation or cracks on the instrument panel or instrument panel reinforcement.

HINT:
There should be no interference between the instrument panel and the front passenger airbag assembly.
CAUTION:
Be sure to follow the correct removal and installation procedures.