DTC	B1186/58	Open in Front Passenger Side Squib 2nd Step Circuit

DESCRIPTION

The front passenger side squib 2nd step circuit consists of the center airbag sensor assembly and the front passenger airbag assembly.
The circuit instructs the SRS to deploy when deployment conditions are met.
DTC B1186/58 is recorded when an open circuit is detected in the front passenger side squib 2nd step circuit.

DTC No.	DTC Detecting Condition	Trouble Area
B1186/58	• Open circuit in P2+ wire harness or P2- wire harness of front passenger side squib 2nd step • Front passenger side squib 2nd step malfunction • Center airbag sensor assembly malfunction	• Front passenger airbag assembly (Front passenger side squib 2nd step) • Center airbag sensor assembly • Instrument panel wire

WIRING DIAGRAM

See page RS-266.

INSPECTION PROCEDURE

HINT:

- Perform the simulation method by selecting the "check mode" (signal check) with the intelligent tester (See page RS-38).
- After selecting the "check mode" (signal check), perform the simulation method by wiggling each connector of the airbag system or driving the vehicle on a city or rough road (See page RS-38).

1	CHECK FRONT PASSENGER AIRBAG ASSEMBLY (FRONT PASSENGER SIDE SQUIB 2ND STEP)

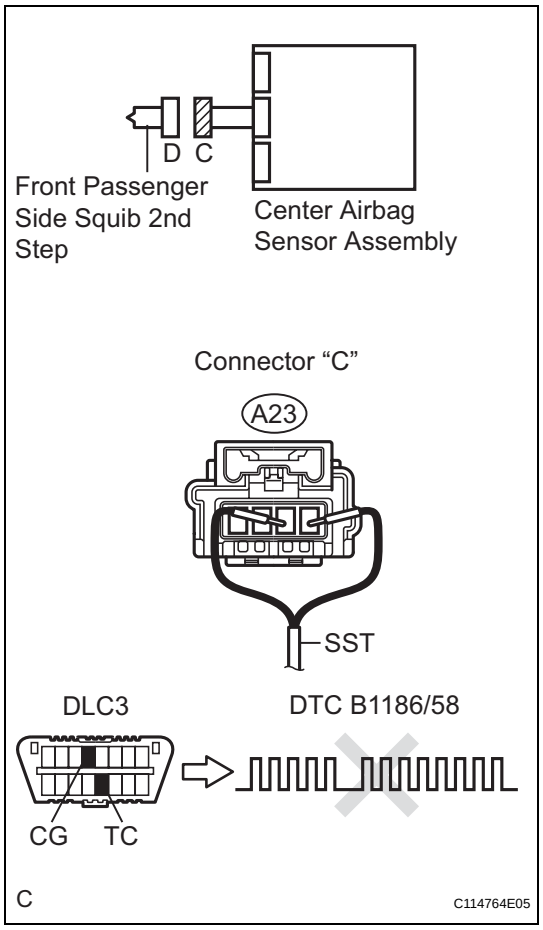

(a) Turn the ignition switch to the LOCK position.
(b) Disconnect the negative (-) terminal cable from the battery, and wait for at least 90 seconds.
(c) Disconnect the connectors from the front passenger airbag assembly.
(d) Connect the black wire side of SST (resistance 2.1 Ω) to the instrument panel wire.
CAUTION:
Never connect a tester to the front passenger airbag assembly (front passenger side squib 2nd step) for measurement, as this may lead to a serious injury due to airbag deployment.
NOTICE:
Do not forcibly insert the SST into the terminals of the connector when connecting.
Insert the SST straight into the terminals of the connector.
SST 09843-18060
(e) Connect the negative (-) terminal cable to the battery, and wait for at least 2 seconds.
(f) Turn the ignition switch to the ON position, and wait for at least 60 seconds.
(g) Clear the DTCs stored in memory (See page RS-35).
(h) Turn the ignition switch to the LOCK position.
(i) Turn the ignition switch to the ON position, and wait for at least 60 seconds.
(j) Check the DTCs (See page RS-35).
OK:
DTC B1186/58 is not output.
HINT:
Codes other than DTC B1186/58 may be output at this time, but they are not related to this check.

RS

NG → **Go to step 2**

OK

REPLACE FRONT PASSENGER AIRBAG ASSEMBLY

2	CHECK INSTRUMENT PANEL WIRE (FRONT PASSENGER SIDE SQUIB 2ND STEP CIRCUIT)

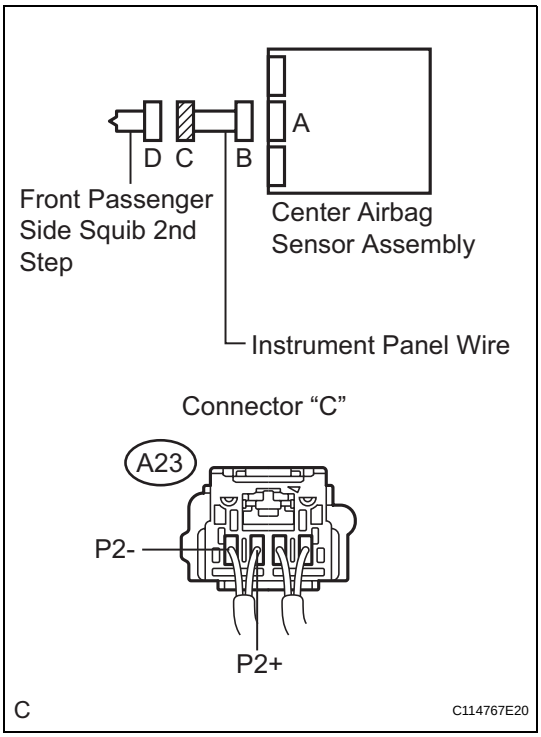

(a) Turn the ignition switch to the LOCK position.
(b) Disconnect the negative (-) terminal cable from the battery, and wait for at least 90 seconds.
(c) Disconnect the SST (resistance 2.1 Ω) from the instrument panel wire.
(d) Disconnect the connector from the center airbag sensor assembly.
(e) Measure the resistance according to the value(s) in the table below.

Standard resistance

Tester connection	Condition	Specified condition
A23-3 (P2+) - A23-4 (P2-)	Always	Below 1 Ω

NG → **REPAIR OR REPLACE INSTRUMENT PANEL WIRE**

OK

3	CHECK CENTER AIRBAG SENSOR ASSEMBLY

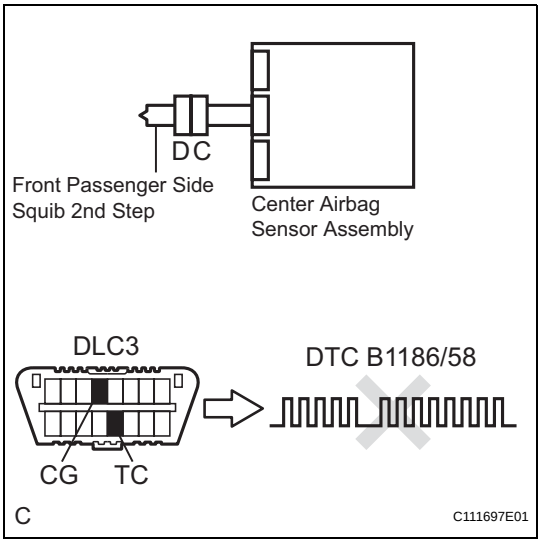

(a) Connect the connectors to the front passenger airbag assembly and the center airbag sensor assembly.
(b) Connect the negative (-) terminal cable to the battery, and wait for at least 2 seconds.
(c) Turn the ignition switch to the ON position, and wait for at least 60 seconds.
(d) Clear the DTCs stored in memory (See page RS-35).
(e) Turn the ignition switch to the LOCK position.
(f) Turn the ignition switch to the ON position, and wait for at least 60 seconds.
(g) Check the DTCs (See page RS-35).

OK:

DTC B1186/58 is not output.

HINT:

Codes other than DTC B1186/58 may be output at this time, but they are not related to this check.

NG → **REPLACE CENTER AIRBAG SENSOR ASSEMBLY**

OK

USE SIMULATION METHOD TO CHECK