INSTALLATION

HINT:

- Use the same procedures for the RH side and LH side.
- The procedures listed below are for the LH side.

1. INSTALL CURTAIN SHIELD AIRBAG ASSEMBLY LH

(a) Install the curtain shield airbag assembly LH with the 13 bolts in the order shown in the illustration.

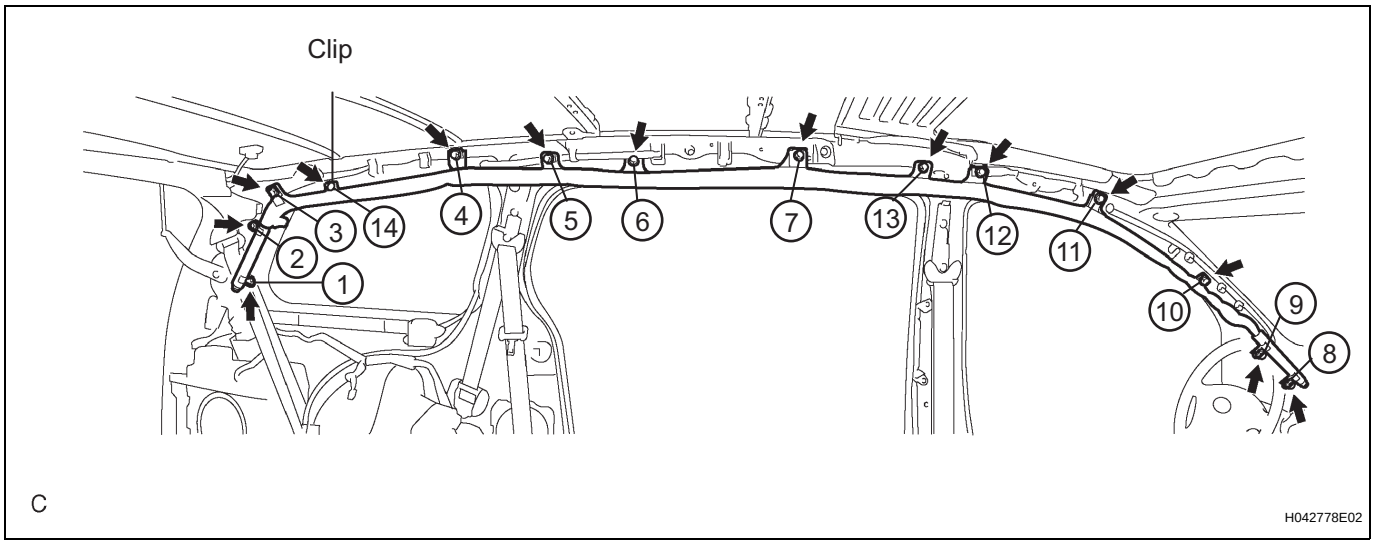

Torque: 14 N*m (143 kgf*cm, 10 ft.*lbf)

NOTICE:

Do not twist the curtain shield airbag assembly LH when installing it.

(b) Install the clip.

(c) Connect the connector to the curtain shield airbag assembly LH.

NOTICE:

When handling the airbag connector, take care not to damage the airbag wire harness.

2. INSTALL POWER BACK DOOR UNIT ASSEMBLY

3. INSTALL ROOF HEADLINING ASSEMBLY

HINT:

Refer to the procedures from "INSTALL ROOF HEADLINING ASSEMBLY" (See page IR-14).

4. INSTALL INSTRUMENT PANEL SUB-ASSEMBLY

HINT:

(See page IP-14)

5. INSPECT STEERING WHEEL CENTER POINT

6. INSTALL STEERING PAD

HINT:

(See page RS-424)

7. CONNECT CABLE TO NEGATIVE BATTERY TERMINAL

8. PERFORM INITIALIZATION

(a) Perform initialization.

HINT:

Some systems need initialization when disconnecting the cable from the negative battery terminal.

9. INSPECT SRS WARNING LIGHT

(a) Inspect the SRS warning light (See page RS-27).

DISPOSAL

HINT:

- Use the same procedures for the RH side and LH side.
- The procedures listed below are for the LH side.
- When scrapping a vehicle equipped with the SRS or disposing of the curtain shield airbag assembly, be sure to deploy the airbag first in accordance with the procedure described below. If any abnormality occurs with airbag deployment, contact the SERVICE DEPT. of TOYOTA MOTOR SALES, U.S.A., INC.

CAUTION:

- **Never dispose of a curtain shield airbag assembly that has an undeployed airbag.**
- **The airbag produces an exploding sound when it is deployed, so perform the operation outdoors and where it will not create a nuisance to nearby residents.**
- **When deploying the airbag, always use the specified SST (SRS Airbag Deployment Tool). Perform the operation in a place away from electrical noise.**
- **When deploying the airbag, perform the operation at least 10 m (33 ft) away from the curtain shield airbag assembly.**
- **The curtain shield airbag assembly becomes extremely hot when the airbag is deployed, so do not touch it for at least 30 minutes after deployment.**
- **Use gloves and safety glasses when handling a curtain shield airbag assembly with a deployed airbag.**
- **Do not apply water, etc. to a curtain shield airbag assembly with a deployed airbag.**
- **Always wash your hands with water after completing the operation.**

1. DISPOSE OF CURTAIN SHIELD AIRBAG ASSEMBLY (WHEN INSTALLED IN VEHICLE)

HINT:

Prepare a battery as the power source to deploy the airbag.

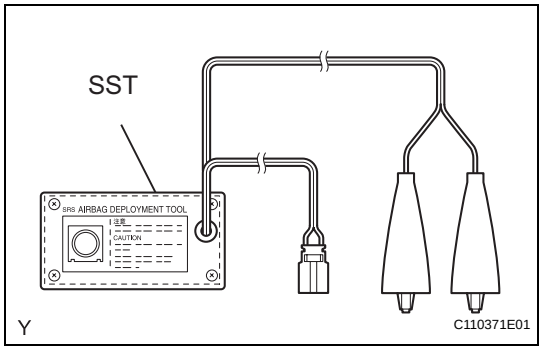

(a) Check the function of the SST (See page RS-425).

(b) Precaution (See page RS-1).

(c) Disconnect the cable from the negative battery terminal.

CAUTION:

Wait for 90 seconds after disconnecting the cable to prevent the airbag working.

(d) Remove the roof headlining assembly.

HINT:

Refer to the procedures up to "REMOVE ROOF HEADLINING ASSEMBLY" (See page IR-6).

(e) Remove the instrument panel assembly.

(f) Install the SST.

(1) Disconnect the connector from the curtain shield airbag assembly.

NOTICE:

When handling the airbag connector, take care not to damage the airbag wire harness.

(2) After connecting the SST below to each other, connect them to the curtain shield airbag assembly.

SST 09082-00700, 09082-00802 (09082-10801, 09082-20801)

NOTICE:

To avoid damaging the SST connector and wire harness, do not lock the secondary lock of the twin lock.

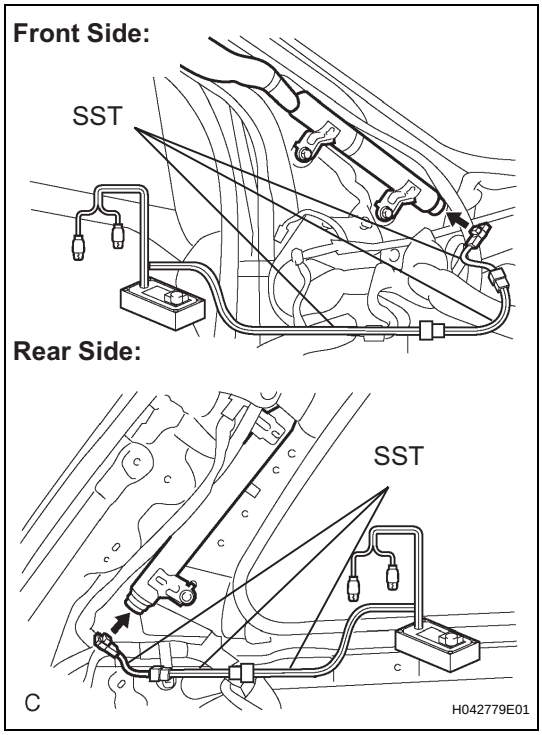

(3) Front side:
Move the SST to at least 10 m (33 ft) away from the front of the vehicle.

(4) Rear side:
Move the SST to at least 10 m (33 ft) away from the rear of the vehicle.

(5) Maintaining enough clearance for the SST wire harness in the rear side window, close all doors and windows of the vehicle.

NOTICE:

Take care not to damage the SST wire harness.

(6) Connect the red clip of the SST to the battery positive (+) terminal and the black clip of the SST to the negative (-) terminal.

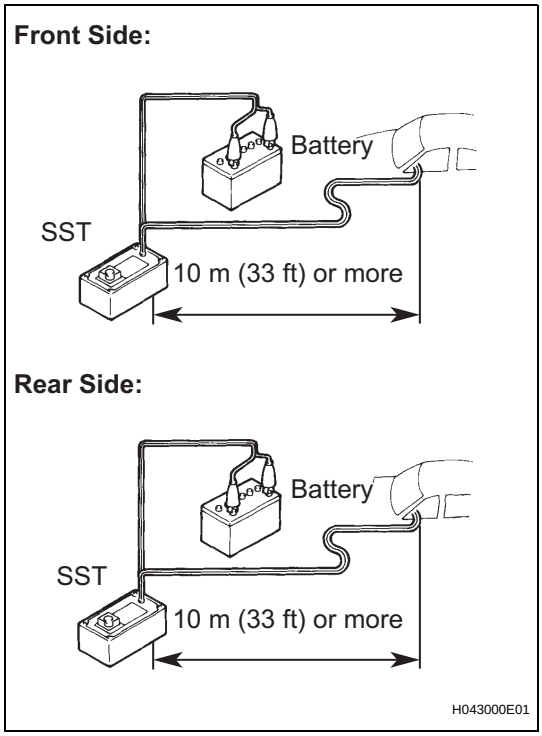

(g) Deploy the airbag.

(1) Check that no one is inside the vehicle or within a 10 m (33 ft) radius of the vehicle.

(2) Press the SST activation switch and deploy the airbag.

CAUTION:

- **When deploying the airbag, make sure that no one is near the vehicle.**

- **The curtain shield airbag assembly becomes extremely hot when the airbag is deployed, so do not touch it for at least 30 minutes after deployment.**
- **Use gloves and safety glasses when handling a curtain shield airbag assembly with a deployed airbag.**
- **Do not apply water, etc. to a curtain shield airbag assembly with a deployed airbag.**
- **Always wash your hands with water after completing the operation.**

HINT:
The airbag is deployed as the LED of the SST activation switch comes on.

2. DISPOSE OF CURTAIN SHIELD AIRBAG ASSEMBLY (WHEN NOT INSTALLED IN VEHICLE)

NOTICE:

- **When disposing of the curtain shield airbag assembly, never use the customer's vehicle to deploy the airbag.**
- **Be sure to follow the procedure detailed below when deploying the airbag.**

HINT:
Prepare a battery as the power source to deploy the airbag.

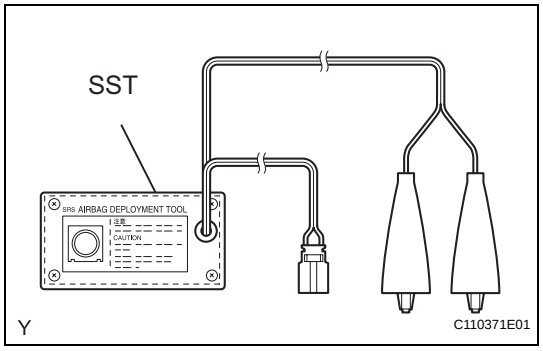

(a) Check the function of the SST (See page RS-425).

(b) Remove the curtain shield airbag assembly (See page RS-448).

CAUTION:
When removing the curtain shield airbag assembly, work must be started 90 seconds after the ignition switch is turned to the "LOCK" position and the negative (-) terminal cable is disconnected from the battery.

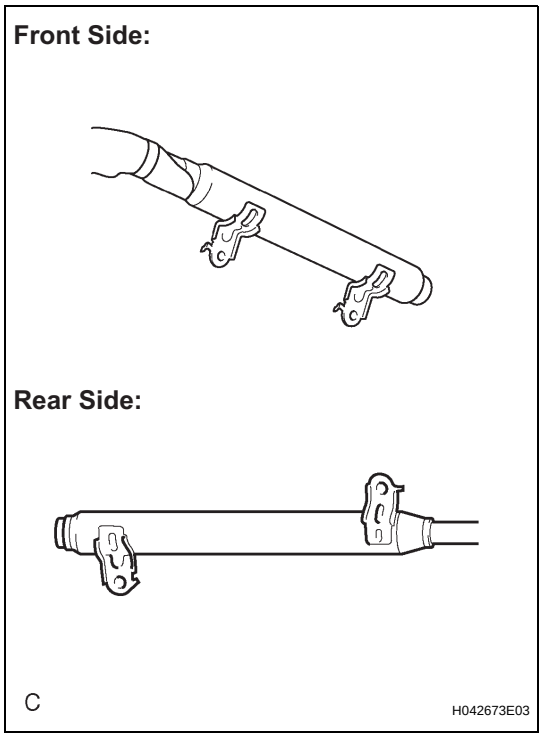

(c) Cut off the deployment section of the curtain shield airbag assembly.

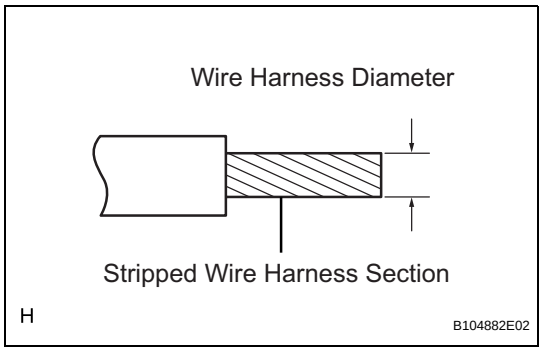

(d) Using a service-purpose wire harness for the vehicle, tie down the curtain shield airbag assembly to the tire.

Wire harness:

Stripped wire harness section:

1.25 mm^2 or more (0.0019 in.^{2} or more)

CAUTION:

If the wire harness is too thin or an alternative object is used to tie down the curtain shield airbag assembly, it may be snapped by the shock when the airbag is deployed. Always use a wire harness for vehicle use with an area of at least 1.25 mm^2 (0.0019 in.^{2}).

HINT:

To calculate the area of the stripped wire harness section:

Area = 3.14 x (Diameter)^2 divided by 4

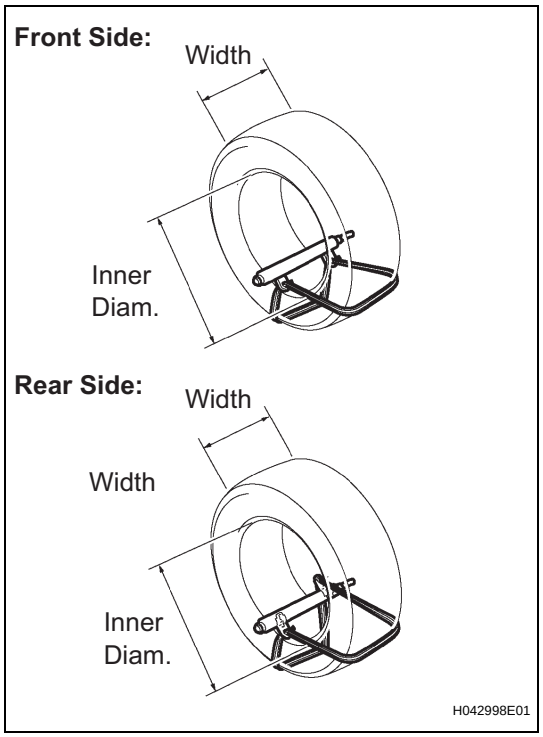

(1) Position the curtain shield airbag assembly inside the tire as shown in the illustration.
Tire size:
Must exceed the following dimensions
Width:
185 mm (7.28 in.)
Inner diameter:
360 mm (14.17 in.)
CAUTION:
Make sure that the wire harness is tight. If there is slack in the wire harness, the curtain shield airbag assembly may become loose due to the shock when the airbag is deployed.
NOTICE:
The tire will be damaged by airbag deployment, so use an extra tire.

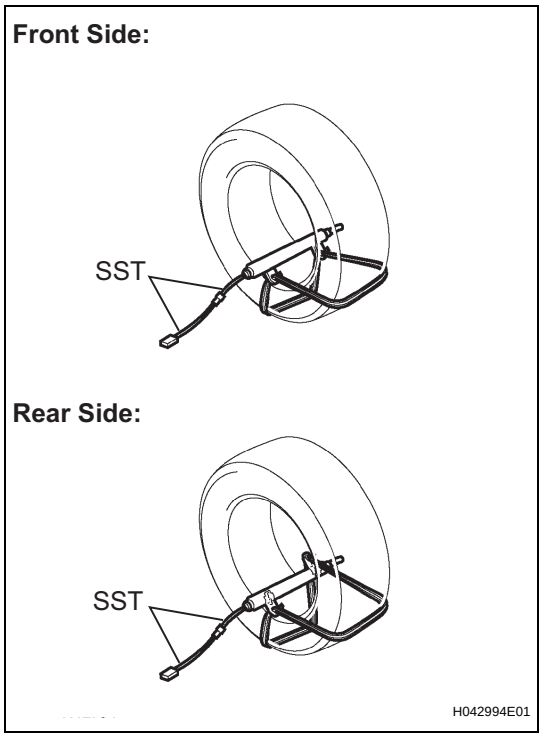

(e) Install the SST.
(1) After connecting the SST below to each other, connect them to the curtain shield airbag assembly.
SST 09082-00802 (09082-10801, 09082-20801)

(f) Place the tires.
CAUTION:
Do not face the deployment direction of the curtain shield airbag assembly toward the ground.

RS

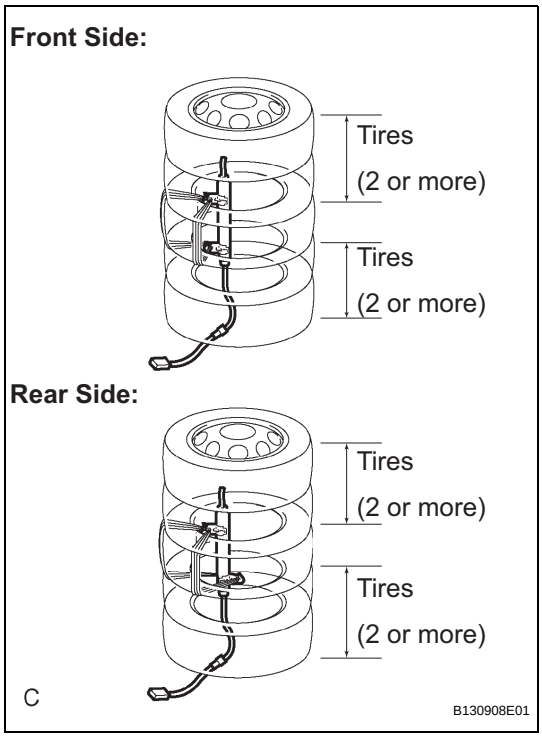

(1) Place at least 2 tires under the tire which the curtain shield airbag assembly is tied to.
(2) Place at least 2 tires over the tire which the curtain shield airbag assembly is tied to. The top tire should have a disc wheel installed.
NOTICE:
Do not place the SST connector under the tire because it could be damaged.

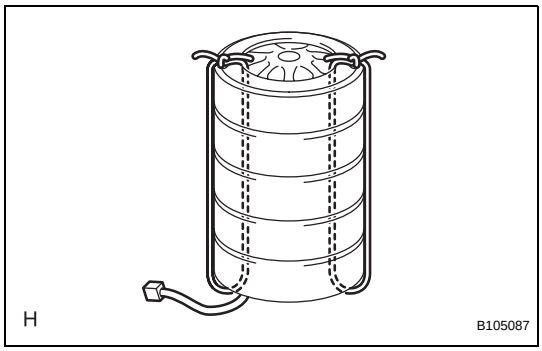

(3) Tie the tires together with 2 wire harnesses.
CAUTION:
Make sure that the wire harness is tight. Looseness in the wire harness results in the tires coming free due to the shock when the airbag is deployed.

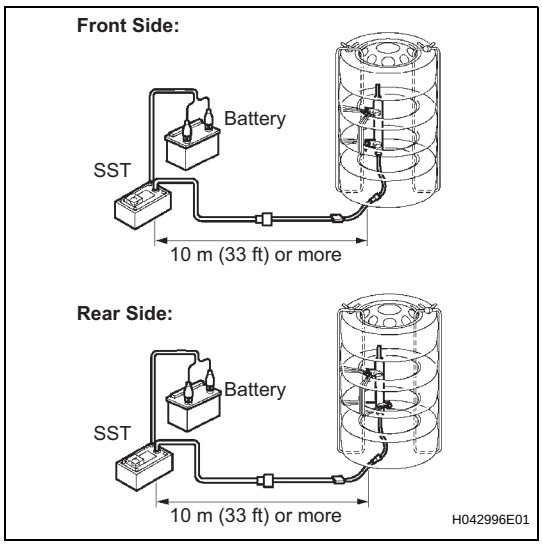

(g) Install the SST.
(1) Connect the SST connector.
SST 09082-00700
NOTICE:
To avoid damaging the SST connector and wire harness, do not lock the secondary lock of the twin lock. Also, secure some slack for the SST wire harness inside the tire.
(2) Move the SST at least 10 m (33 ft) away from the airbag tied down to the tires.
(h) Deploy the airbag.
(1) Connect the red clip of the SST to the battery positive (+) terminal and the black clip of the SST to the negative (-) terminal.
(2) Check that no one is within a 10 m (33 ft) radius of the tire which the curtain shield airbag assembly is tied to.

(3) Press the SST activation switch and deploy the airbag.
CAUTION:
When deploying the airbag, make sure that no one is near the tire.
HINT:
The airbag is deployed as the LED of the SST activation switch comes on.

(i) Dispose of the curtain shield airbag assembly.
CAUTION:
- **The curtain shield airbag assembly becomes extremely hot when the airbag is deployed, so do not touch it for at least 30 minutes after deployment.**
- **Use gloves and safety glasses when handling a curtain shield airbag assembly with a deployed airbag.**
- **Do not apply water, etc. to a curtain shield airbag assembly with a deployed airbag.**
- **Always wash your hands with water after completing the operation.**

(1) Remove the curtain shield airbag assembly from the tire.
(2) Place the curtain shield airbag assembly in a plastic bag, tie it tightly and dispose of it as other general part disposal.

Front Side:

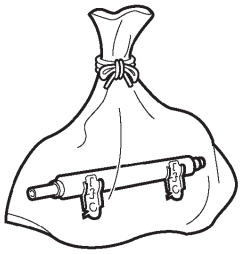

Rear Side:

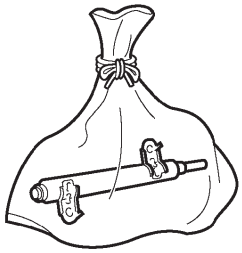

H042997E01

RS