DTC	B1635/87	Short in Rear Curtain Shield Squib LH Circuit

DESCRIPTION

The rear curtain shield squib LH circuit consists of the center airbag sensor assembly and the curtain shield airbag assembly LH.
The circuit instructs the SRS to deploy when deployment conditions are met.
DTC B1635/87 is recorded when a short circuit is detected in the rear curtain shield squib LH circuit.

DTC No.	DTC Detecting Condition	Trouble Area
B1635/87	• Short circuit between ICL+ wire harness and ICL- wire harness of rear curtain shield squib LH • Rear curtain shield squib LH malfunction • Center airbag sensor assembly malfunction	• Curtain shield airbag assembly LH (Rear curtain shield squib LH) • Center airbag sensor assembly • Floor wire

RS

WIRING DIAGRAM

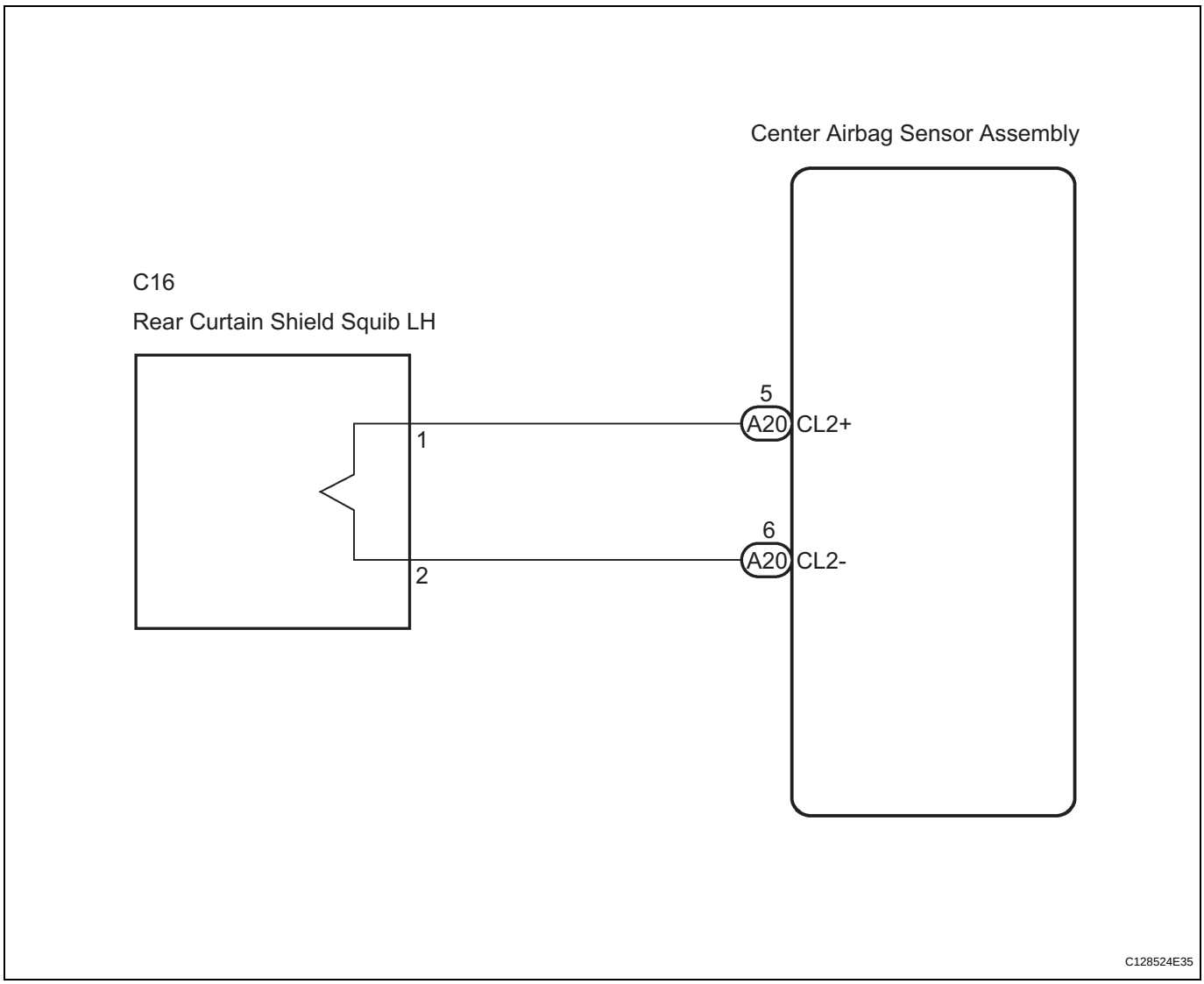

INSPECTION PROCEDURE

HINT:

- Perform the simulation method by selecting the "check mode" (signal check) with the intelligent tester (See page RS-38).

- After selecting the "check mode" (signal check), perform the simulation method by wiggling each connector of the airbag system or driving the vehicle on a city or rough road (See page RS-38).

1	CHECK CURTAIN SHIELD AIRBAG ASSEMBLY LH (REAR CURTAIN SHIELD SQUIB LH)

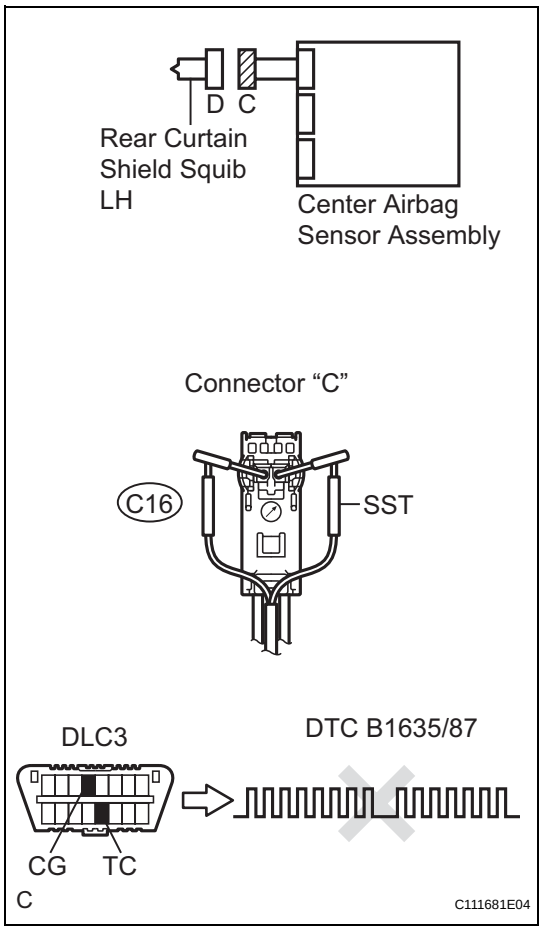

(a) Turn the ignition switch to the LOCK position.
(b) Disconnect the negative (-) terminal cable from the battery, and wait for at least 90 seconds.
(c) Disconnect the connectors from the curtain shield airbag assembly LH.
(d) Connect the white wire side of SST (resistance 2.1 Ω) to the floor wire.
CAUTION:
Never connect a tester to the curtain shield airbag assembly LH (Rear curtain shield squib LH) for measurement, as this may lead to a serious injury due to airbag deployment.
NOTICE:
Do not forcibly insert the SST into the terminals of the connector when connecting.
Insert the SST straight into the terminals of the connector.
SST 09843-18060
(e) Connect the negative (-) terminal cable to the battery, and wait for at least 2 seconds.
(f) Turn the ignition switch to the ON position, and wait for at least 60 seconds.
(g) Clear the DTCs stored in memory (See page RS-35).
(h) Turn the ignition switch to the LOCK position.
(i) Turn the ignition switch to the ON position, and wait for at least 60 seconds.
(j) Check the DTCs (See page RS-35).
OK:
DTC B1635/87 is not output.
HINT:
Codes other than DTC B1635/87 may be output at this time, but they are not related to this check.

NG → **Go to step 2**

OK

REPLACE CURTAIN SHIELD AIRBAG ASSEMBLY LH

2	CHECK CONNECTORS

(a) Turn the ignition switch to the LOCK position.
(b) Disconnect the negative (-) terminal cable from the battery, and wait for at least 90 seconds.
(c) Disconnect the SST (resistance 2.1 Ω) from the floor wire.

(d) Check that the floor wire connectors (on the curtain shield airbag assembly LH side) are not damaged.
OK:
The lock button is not disengaged, and the claw of the lock is not deformed or damaged.

NG → **REPAIR OR REPLACE FLOOR WIRE**

OK

RS

3 CHECK FLOOR WIRE (REAR CURTAIN SHIELD SQUIB LH CIRCUIT)

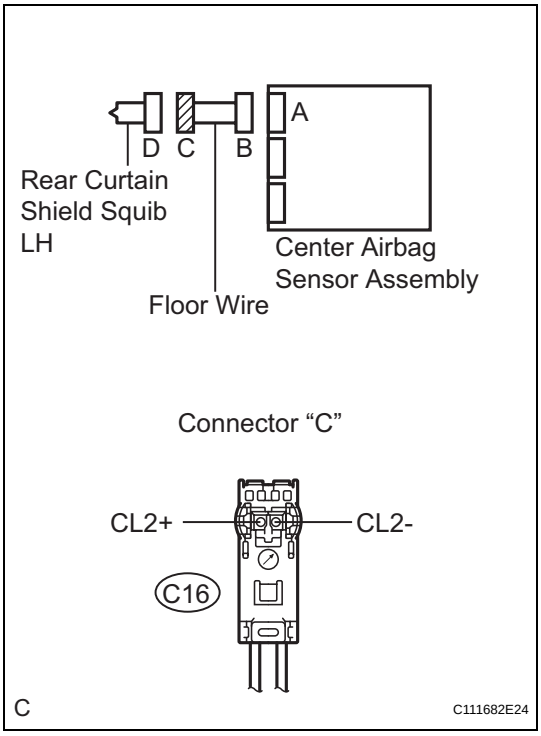

(a) Disconnect the connector from the center airbag sensor assembly.
(b) Release the activation prevention mechanism built into connector "B" (See page RS-27).
(c) Measure the resistance according to the value(s) in the table below.
Resistance

Tester connection	Condition	Specified condition
C16-1 (CL2+) - Body ground	Always	1 MΩ or higher
C16-2 (CL2-) - Body ground	Always	1 MΩ or higher

NG → **REPAIR OR REPLACE FLOOR WIRE**

OK

4	CHECK CENTER AIRBAG SENSOR ASSEMBLY

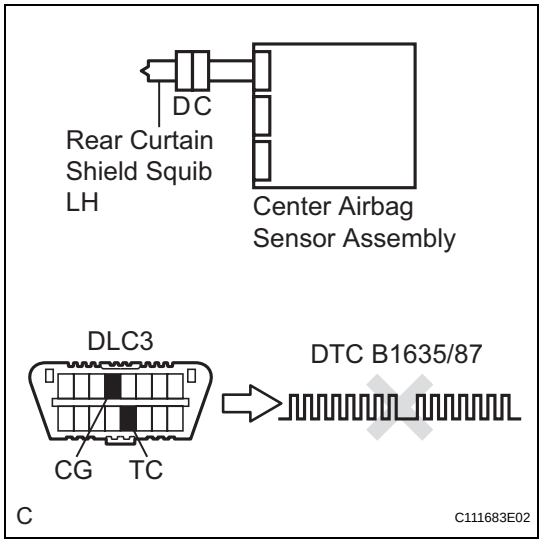

(a) Connect the connectors to the curtain shield airbag assembly LH and the center airbag sensor assembly.
(b) Connect the negative (-) terminal cable to the battery, and wait for at least 2 seconds.
(c) Turn the ignition switch to the ON position, and wait for at least 60 seconds.
(d) Clear the DTCs stored in memory (See page RS-35).
(e) Turn the ignition switch to the LOCK position.
(f) Turn the ignition switch to the ON position, and wait for at least 60 seconds.
(g) Check the DTCs (See page RS-35).

OK:

DTC B1635/87 is not output.

HINT:

Codes other than DTC B1635/87 may be output at this time, but they are not related to this check.

RS

NG → **REPLACE CENTER AIRBAG SENSOR ASSEMBLY**

OK

USE SIMULATION METHOD TO CHECK