FRONT SEAT SIDE AIRBAG ASSEMBLY

ON-VEHICLE INSPECTION

1. FRONT SEAT SIDE AIRBAG ASSEMBLY (VEHICLE NOT INVOLVED IN COLLISION)

(a) Perform a diagnostic system check (See page RS-27).

(b) With the front seat side airbag assembly installed on the vehicle, perform a visual check. If there are any defects as mentioned below, replace the front seatback assembly with a new one:
Cuts, minute cracks or marked discoloration on the front seatback assembly around the front seat side airbag assembly.

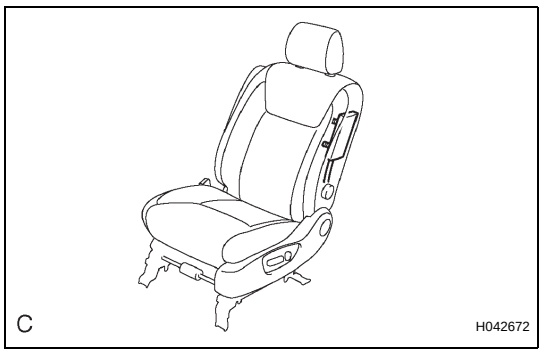

2. FRONT SEAT SIDE AIRBAG ASSEMBLY (VEHICLE INVOLVED IN COLLISION AND AIRBAG HAS NOT DEPLOYED)

(a) Perform a diagnostic system check (See page RS-27).

(b) With the front seat side airbag assembly removed from the vehicle, perform a visual check. If there are any defects as mentioned below, replace the front seat side airbag assembly with a new one:

- Cuts, minute cracks or marked discoloration on the front seat side airbag assembly.
- Cracks or other damage to the wire harness or connector.

CAUTION:
Be sure to follow the correct removal and installation procedures.

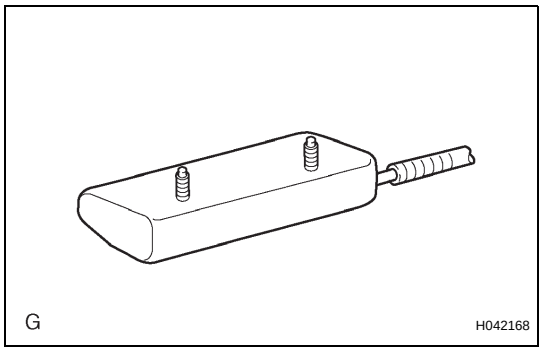

DISPOSAL

HINT:

- Use the same procedures for the RH side and LH side.
- The procedures listed below are for the LH side.
- When scrapping a vehicle equipped with the SRS or disposing of the front seat side airbag assembly, be sure to deploy the airbag first in accordance with the procedure described below. If any abnormality occurs with airbag deployment, contact the SERVICE DEPT. of TOYOTA MOTOR SALES, U.S.A., INC.

CAUTION:

- **Never dispose of a front seat side airbag assembly that has an undeployed airbag.**
- **The airbag produces an exploding sound when it is deployed, so perform the operation outdoors and where it will not create a nuisance to nearby residents.**
- **When deploying the airbag, always use the specified SST (SRS Airbag Deployment Tool). Perform the operation in a place away from electrical noise.**
- **When deploying the airbag, perform the operation at least 10 m (33 ft) away from the airbag assembly.**
- **The front seat side airbag assembly becomes extremely hot when the airbag is deployed, so do not touch it for at least 30 minutes after deployment.**
- **Use gloves and safety glasses when handling a front seat side airbag assembly with a deployed airbag.**
- **Do not apply water, etc. to a front seat side airbag assembly with a deployed airbag.**
- **Always wash your hands with water after completing the operation.**

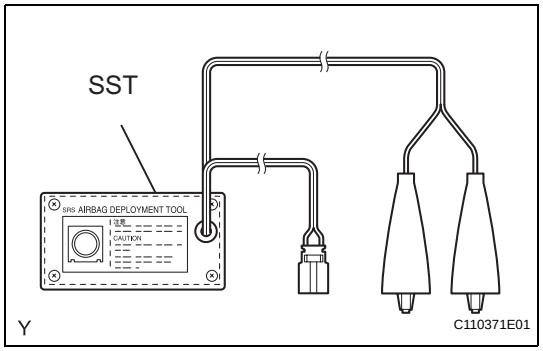

1. DISPOSE OF FRONT SEAT SIDE AIRBAG ASSEMBLY (WHEN INSTALLED IN VEHICLE)

HINT:

Prepare a battery as the power source to deploy the airbag.

(a) Check the function of the SST (See page RS-425).

(b) Precaution (See page RS-1).

(c) Disconnect the cable from the negative battery terminal.

CAUTION:

Wait for 90 seconds after disconnecting the cable to prevent the airbag working.

(d) Remove the 4 bolts from the front seat assembly.

- For Manual Seat (See page SE-48)
- For Power Seat (See page SE-58)

HINT:

Keep the front seat assembly in the cabin.

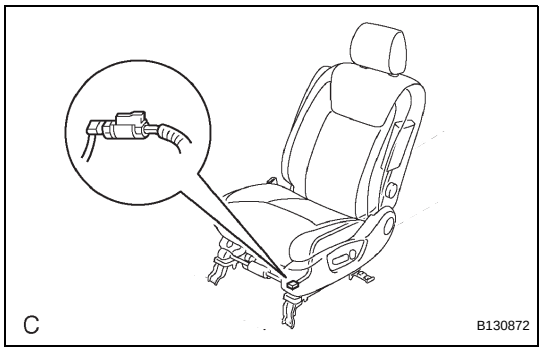

(e) Install the SST.

(1) Disconnect the connector (yellow colored one) from the front seat side airbag assembly.

NOTICE:

When handling the airbag connector, take care not to damage the airbag wire harness.

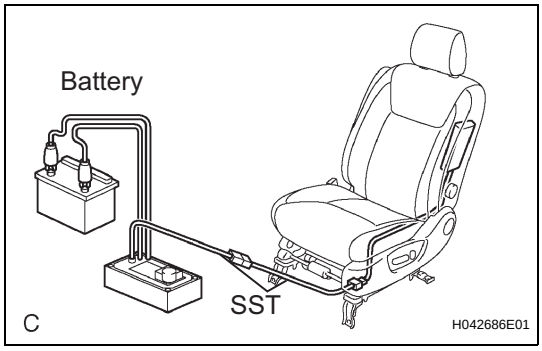

(2) Connect the SST connector to the front seat side airbag assembly connector.

SST 09082-00700, 09082-00750

NOTICE:

To avoid damaging the SST connector and wire harness, do not lock the secondary lock of the twin lock.

(3) Install the 4 bolts to the front seat assembly.

- For Manual Seat (See page SE-48)
- For Power Seat (See page SE-58)

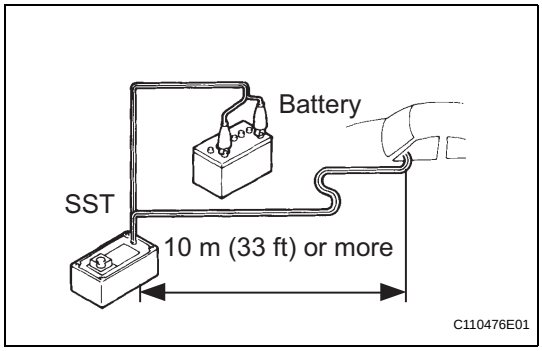

(4) Move the SST at least 10 m (33 ft) away from the vehicle front side window.

(5) Maintaining enough clearance for the SST wire harness in the front side window, close all doors and windows of the vehicle.

NOTICE:

Take care not to damage the SST wire harness.

(6) Connect the red clip of the SST to the battery positive (+) terminal and the black clip of the SST to the negative (-) terminal.

(f) Deploy the airbag.

(1) Check that no one is inside the vehicle or within a 10 m (33 ft) radius of the vehicle.

(2) Press the SST activation switch and deploy the airbag.

CAUTION:

- **When deploying the airbag, make sure that no one is near the vehicle.**
- **The front seat side airbag assembly becomes extremely hot when the airbag is deployed, so do not touch it for at least 30 minutes after deployment.**
- **Use gloves and safety glasses when handling a front seat side airbag assembly with a deployed airbag.**
- **Do not apply water, etc. to a front seat side airbag assembly with a deployed airbag.**
- **Always wash your hands with water after completing the operation.**

HINT:
The airbag is deployed as the LED of the SST activation switch comes on.

2. DISPOSE OF FRONT SEAT SIDE AIRBAG ASSEMBLY (WHEN NOT INSTALLED IN VEHICLE)

NOTICE:

- **When disposing of the front seat side airbag assembly, never use the customer's vehicle to deploy the airbag.**
- **Be sure to follow the procedure detailed below when deploying the airbag.**

HINT:
Prepare a battery as the power source to deploy the airbag.

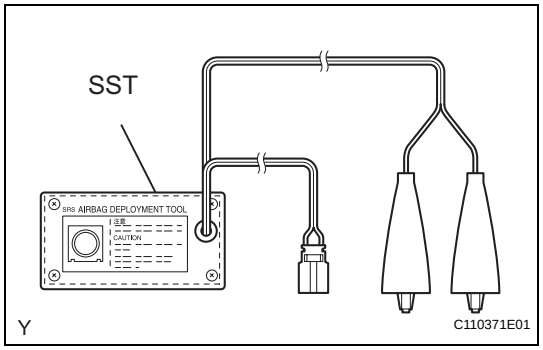

(a) Check the function of the SST (See page RS-425).

(b) Remove the front seat side airbag assembly.

(1) Remove the front seat assembly.
- For Manual Seat (See page SE-48)
- For Power Seat (See page SE-58)

(2) Remove the 2 nuts and the front seat side airbag assembly from the seatback assembly.

CAUTION:
- **When removing the front seat side airbag assembly, work must be started 90 seconds after the ignition switch is turned to the "LOCK" position and the negative (-) terminal cable is disconnected from the battery.**
- **When storing the front seat side airbag assembly, keep the airbag deployment side facing upward.**

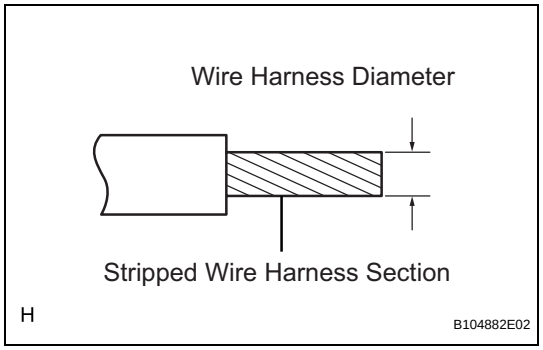

(c) Using a service-purpose wire harness for the vehicle, tie down the front seat side airbag assembly to the tire.

Wire harness:
Stripped wire harness section:
1.25 mm^2 or more (0.0019 $in.^2$ or more)

HINT:
To calculate the area of the stripped wire harness section:

Area = 3.14 x $(Diameter)^2$ divided by 4

CAUTION:
If the wire harness is too thin or an alternative object is used to tie down the front seat side airbag assembly, it may be snapped by the shock when the airbag is deployed. Always use a wire harness for vehicle use with an area of at least 1.25 mm^2 (0.0019 $in.^2$).

RS

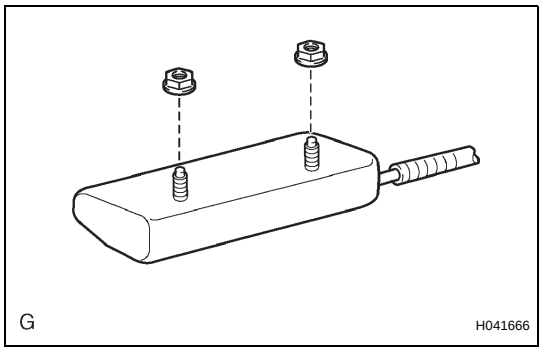

(1) Install the 2 nuts to the front seat side airbag assembly.

RS

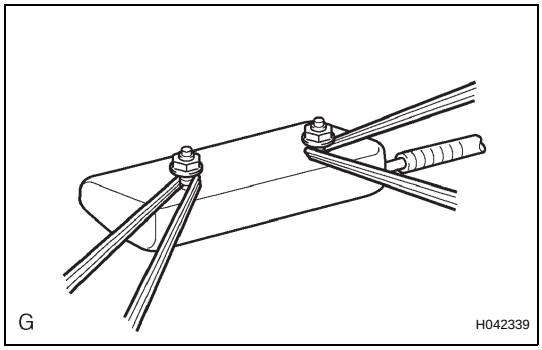

(2) Wind the wire harness around each of the stud bolts of the front seat side airbag assembly as shown in the illustration.

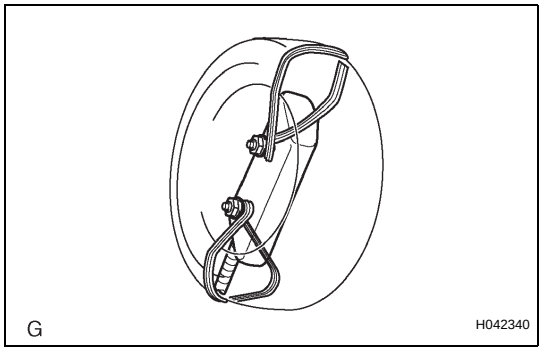

(3) Position the front seat side airbag assembly inside the tire as shown in the illustration.
Tire size:
Must exceed the following dimensions
Width:
185 mm (7.28 in.)
Inner diameter:
360 mm (14.17 in.)
CAUTION:
- **Make sure that the wire harness is tight. If there is slack in the wire harness, the front seat side airbag assembly may become loose due to the shock when the airbag is deployed.**
- **Always tie down the front seat side airbag assembly with the airbag deployment direction facing inside the tire.**

NOTICE:
The tire will be damaged by airbag deployment, so use an extra tire.

(d) Install the SST.
(1) Connect the SST connector to the front seat side airbag assembly connector.
SST 09082-00750

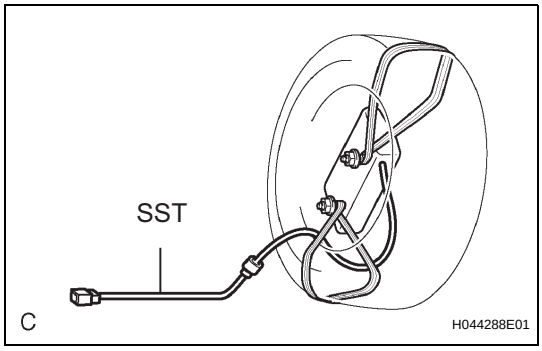

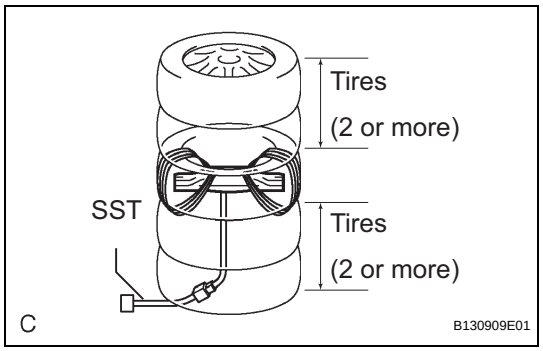

(e) Place the tires.
(1) Place at least 2 tires under the tire which the front seat side airbag assembly is tied to.
(2) Place at least 2 tires over the tire which the front seat side airbag assembly is tied to. The top tire should have a disc wheel installed.
NOTICE:
Do not place the SST connector under the tire because it could be damaged.

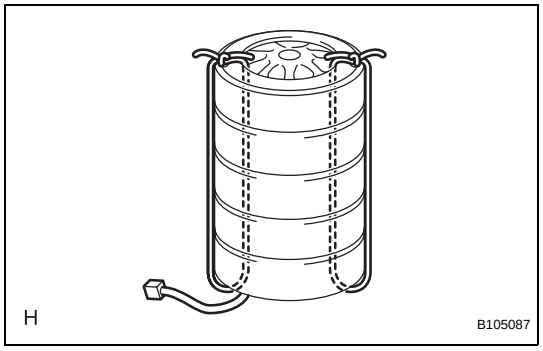

(3) Tie the tires together with 2 wire harnesses.
CAUTION:
Make sure that the wire harness is tight. Looseness in the wire harness results in the tires coming free due to the shock when the airbag is deployed.

RS

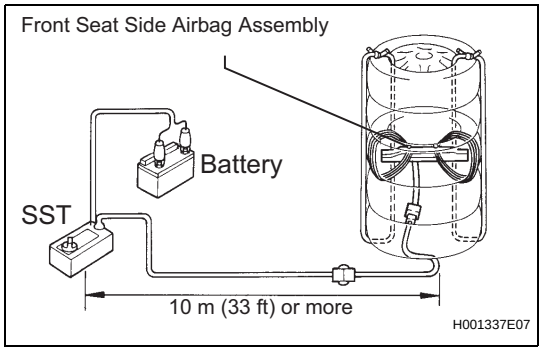

(f) Install the SST.
(1) Connect the SST connector.
SST 09082-00700
NOTICE:
To avoid damaging the SST connector and wire harness, do not lock the secondary lock of the twin lock. Also, secure some slack for the SST wire harness inside the tire.
(2) Move the SST at least 10 m (33 ft) away from the airbag tied down to the tires.
(g) Deploy the airbag.
(1) Connect the red clip of the SST to the battery positive (+) terminal and the black clip of the SST to the negative (-) terminal.
(2) Check that no one is within a 10 m (33 ft) radius of the tire which the front seat side airbag assembly is tied to.
(3) Press the SST activation switch and deploy the airbag.
CAUTION:
When deploying the airbag, make sure that no one is near the tire.
HINT:
The airbag is deployed as the LED of the SST activation switch comes on.

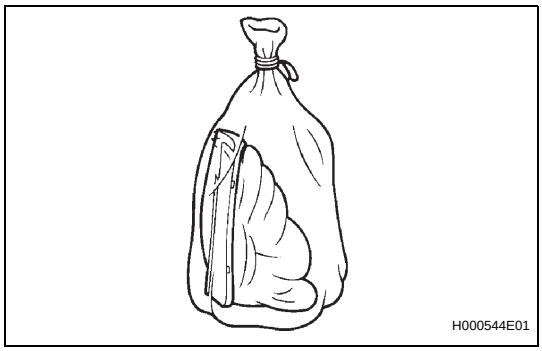

(h) Dispose of the front seat side airbag assembly.
CAUTION:
- **The front seat side airbag assembly becomes extremely hot when the airbag is deployed, so do not touch it for at least 30 minutes after deployment.**
- **Use gloves and safety glasses when handling a front seat side airbag assembly with a deployed airbag.**
- **Do not apply water, etc. to a front seat side airbag assembly with a deployed airbag.**
- **Always wash your hands with water after completing the operation.**

(1) Remove the front seat side airbag assembly from the tire.
(2) Place the front seat side airbag assembly in a plastic bag, tie it tightly and dispose of it as other general part disposal.