DTC	B1794	Open in Occupant Classification ECU Battery Positive Line

DESCRIPTION

This circuit consists of the occupant classification ECU and the power source circuit (battery, fuse, wire harness).

DTC B1794 is recorded when a malfunction is detected in the occupant classification ECU or the power source circuit.

HINT:

When DTC B1794 is output after switching the ignition switch LOCK-ON-LOCK 50 times in a row when a malfunction occurs in the power circuit for the occupant classification system, the DTC is output again when a malfunction is detected even once after being cleared, unless the normal system code is input.

DTC No.	DTC Detecting Condition	Trouble Area
B1794	• The ignition switch is turned from LOCK to ON, hold for 10 seconds or more, and back to LOCK again 50 times in a row when a malfunction occurs in the power circuit for the occupant classification system. • Occupant classification ECU malfunction	• Battery • ECU-B Fuse • Floor wire No. 2 • Front seat wire RH • Occupant classification ECU

WIRING DIAGRAM

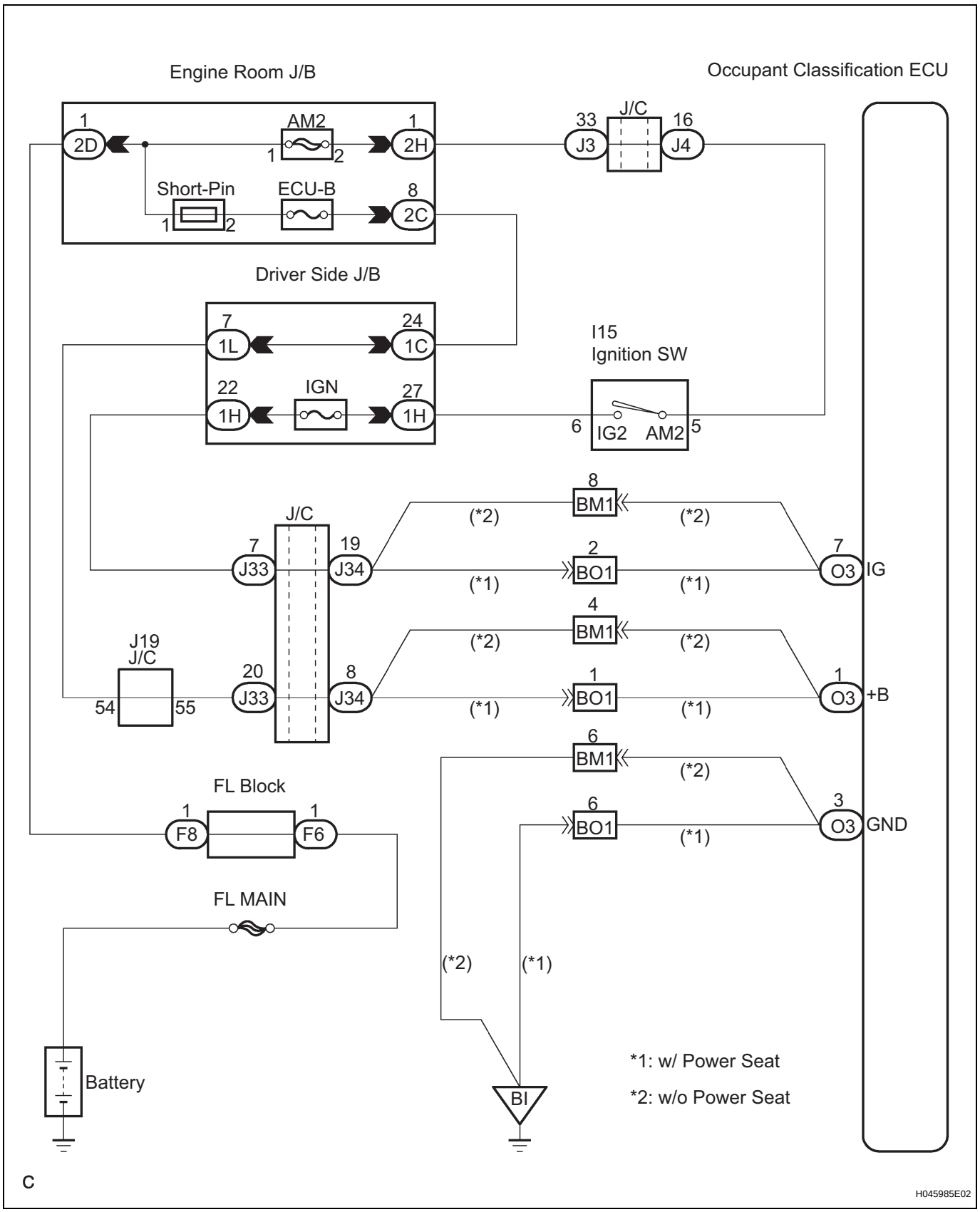

RS

INSPECTION PROCEDURE

1 CHECK BATTERY

(a) Measure the voltage of the battery.
Standard:
11 to 14 V

NG → **REPLACE BATTERY**

OK

2 CHECK FUSE

(a) Check the ECU-B fuse.
Standard:
Below 1 Ω

NG → **REPLACE FUSE**

OK

3 CHECK WIRE HARNESS

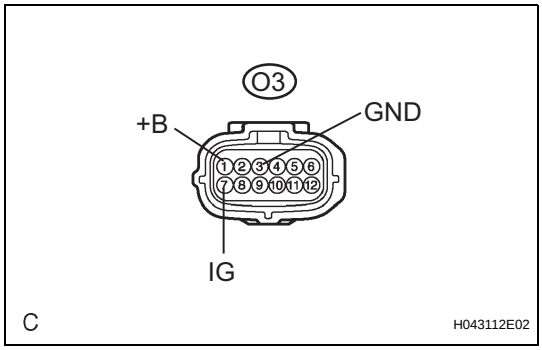

(a) Turn the ignition switch to the LOCK position.
(b) Disconnect the negative (-) terminal cable from the battery, and wait for at least 90 seconds.
(c) Disconnect the connector from the occupant classification ECU.
(d) Connect the negative (-) terminal cable to the battery.
(e) Turn the ignition switch to the ON position.
(f) Measure the voltage and resistance according to the value(s) in the table below.
Standard voltage

Tester connection	Condition	Specified condition
O3-1 (+B) - Body ground	Ignition switch ON	10 to 14 V
O3-7 (IG) - Body ground	Ignition switch ON	10 to 14 V

(g) Turn the ignition switch to the LOCK position.
(h) Measure the resistance and resistance according to the value(s) in the table below.
Standard resistance

Tester connection	Condition	Specified condition
O3-3 (GND) - Body ground	Always	Below 1 Ω

NG → **REPAIR OR REPLACE WIRE HARNESS**

OK

4	CHECK DTC

(a) Turn the ignition switch to the ON position.
(b) Clear the DTCs stored in memory (See page RS-335).
HINT:
First clear DTCs stored in the occupant classification ECU and then in the center airbag sensor assembly.
(c) Turn the ignition switch to the LOCK position.
(d) Turn the ignition switch to the ON position, and wait for at least 10 seconds.
(e) Using the intelligent tester, check the DTCs of the occupant classification ECU (See page RS-335).
OK:
DTC B1794 is not output.
HINT:
Codes other than code B1794 may be output at this time, but they are not related to this check.

NG → **Go to step 5**

OK

USE SIMULATION METHOD TO CHECK

5	REPLACE OCCUPANT CLASSIFICATION ECU

(a) Turn the ignition switch to the LOCK position.
(b) Disconnect the negative (-) terminal cable from the battery, and wait for at least 90 seconds.
(c) Replace the occupant classification ECU (See page RS-487).

NEXT

6	PERFORM ZERO POINT CALIBRATION

(a) Connect the negative (-) terminal cable to the battery.
(b) Connect the intelligent tester to the DLC3.
(c) Turn the ignition switch to the ON position.
(d) Using the intelligent tester, perform the "Zero point calibration" (See page RS-328).
OK:
The "COMPLETED" is displayed.

NEXT

7	PERFORM SENSITIVITY CHECK

(a) Using the intelligent tester, perform the "Sensitivity check" (See page RS-328).

RS

Standard value:
27 to 33 kg (59.52 to 72.75 lb)

NEXT

END