REMOVAL

1. **PRECAUTION**
   CAUTION:
   Be sure to read "PRECAUTION" thoroughly before servicing (See page RS-1).

2. **DISCONNECT CABLE FROM NEGATIVE BATTERY TERMINAL**
   CAUTION:
   Wait for 90 seconds after disconnecting the cable to prevent the airbag working.

3. **REMOVE FRONT SEAT ASSEMBLY (for Manual Seat)**
   HINT:
   (See page SE-48)

4. **REMOVE FRONT SEAT ASSEMBLY (for Power Seat)**
   HINT:
   (See page SE-58)

5. **REMOVE RECLINING ADJUSTER RELEASE HANDLE LH (for Manual Seat)**
   HINT:
   (See page SE-49)

6. **REMOVE VERTICAL SEAT ADJUSTER KNOB CAP (for Manual Seat)**
   HINT:
   (See page SE-48)

7. **REMOVE VERTICAL ADJUSTING HANDLE NO.2 (for Manual Seat)**

8. **REMOVE FRONT SEAT CUSHION SHIELD LH (for Manual Seat)**
   HINT:
   (See page SE-49)

9. **REMOVE SLIDE AND VERTICAL POWER SEAT SWITCH KNOB (for Power Seat)**
   HINT:
   (See page SE-58)

10. **REMOVE RECLINING POWER SEAT SWITCH KNOB (for Power Seat)**
    HINT:
    (See page SE-58)

11. **REMOVE FRONT SEAT CUSHION SHIELD ASSEMBLY**
    (a) Remove the 5 screws and the front seat cushion shield assembly.

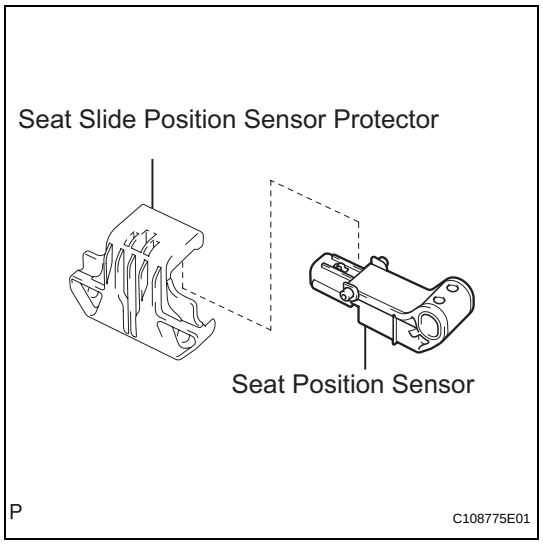

12. REMOVE SEAT SLIDE POSITION SENSOR PROTECTOR

(a) Remove the seat slide position sensor protector from the seat position sensor.

13. REMOVE SEAT POSITION SENSOR

(a) Disconnect the connector from the seat position sensor.

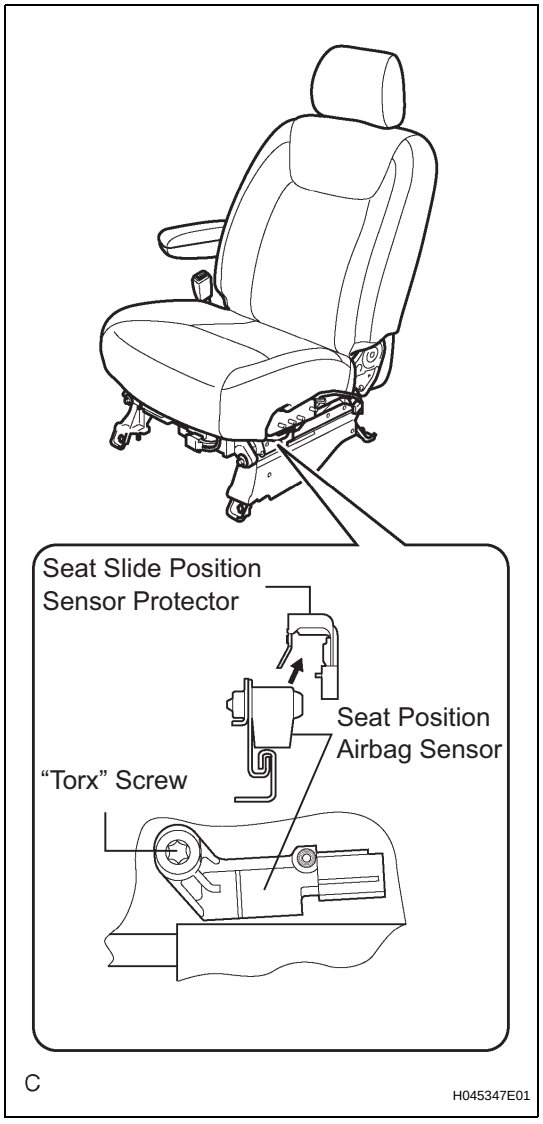

(b) Using a "torx" socket wrench (T30), remove the "torx" screw and the seat position sensor.

RS