INSTALLATION

1. **INSTALL FRONT SHOULDER BELT ANCHOR ADJUSTER ASSEMBLY**
   (a) Install the front shoulder belt anchor adjuster assembly with the bolt.
   Torque: 42 N*m (430 kgf*cm, 31 ft.*lbf)

2. **INSTALL CENTER PILLAR UPPER GARNISH**

3. **INSTALL FRONT SEAT OUTER BELT ASSEMBLY**
   NOTICE:
   Do not disassemble the retractor.

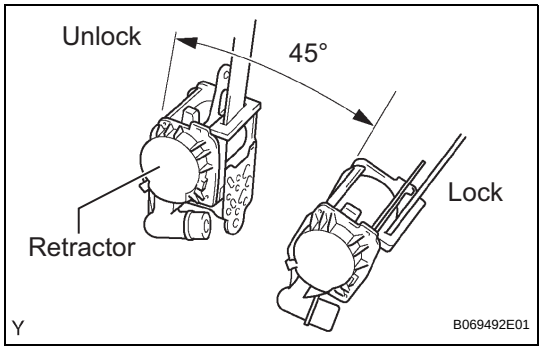

   (a) Check the degree of tilt when beginning to lock the ELR.
      (1) Check that the belt does not lock within 15 degrees of tilt in all directions but that the belt locks with over 45 degrees of tilt, when gently moving the retractor.
      If operation is not as specified, replace the front seat outer belt assembly.
   (b) Install the retractor with the 2 bolts.
   Torque: 42 N*m (430 kgf*cm, 31 ft.*lbf)
   (c) Install the shoulder anchor with the nut.
   Torque: 42 N*m (430 kgf*cm, 31 ft.*lbf)
   (d) Install the floor anchor with the bolt.
   Torque: 42 N*m (430 kgf*cm, 31 ft.*lbf)
   (e) Install the floor anchor cover.
   (f) Check the ELR lock.
   NOTICE:
   The check should be performed with the assembly installed.
      (1) Check that the belt locks when pulling out the belt quickly when the belt is installed.
      If operation is not as specified, replace the front seat outer belt assembly.
   (g) Check the fastening function of the child restraint system.
   NOTICE:
   The check should be performed with the assembly installed.
      (1) Check that the belt cannot be pulled out any more but can be rewound after the belt is fully pulled out.
      (2) Check that the belt can be pulled out and rewound after the belt is fully rewound.
      If operation is not as specified, replace the front seat outer belt assembly.

4. **INSTALL CENTER PILLAR LOWER GARNISH**

5. **INSTALL FRONT DOOR WEATHERSTRIP**

6. **INSTALL REAR DOOR WEATHERSTRIP**

7. **INSTALL FRONT DOOR SCUFF PLATE**

8. **INSTALL REAR DOOR SCUFF PLATE**

9. INSTALL FRONT SEAT ASSEMBLY

HINT:

- Refer to the instructions for installation of the front seat assembly (for flat type) (See page SE-45).
- Refer to the instructions for installation of the front seat assembly (for manual seat) (See page SE-55).
- Refer to the instructions for installation of the front seat assembly (for power seat) (See page SE-66).

10. CONNECT CABLE TO NEGATIVE BATTERY TERMINAL

11. PERFORM INITIALIZATION

HINT:

Some systems need initialization when disconnecting the cable from the negative battery terminal.