REMOVAL

1. **REMOVE REAR DOOR SCUFF PLATE (See page IR-7)**
2. **REMOVE REAR DOOR WEATHERSTRIP (See page IR-7)**
3. **REMOVE BACK DOOR WEATHERSTRIP**
4. **REMOVE BACK DOOR SCUFF PLATE (See page IR-8)**
5. **REMOVE FRONT QUARTER TRIM PANEL ASSEMBLY**
   (a) Remove the floor anchor cover.
   (b) Remove the bolt and disconnect the No. 2 rear seat outer belt assembly on the floor anchor side.
   (c) Remove the 2 package holder net hooks.
   (d) Using a screwdriver, disengage the claw and remove the courtesy light.
   (e) Disconnect the courtesy light connectors.

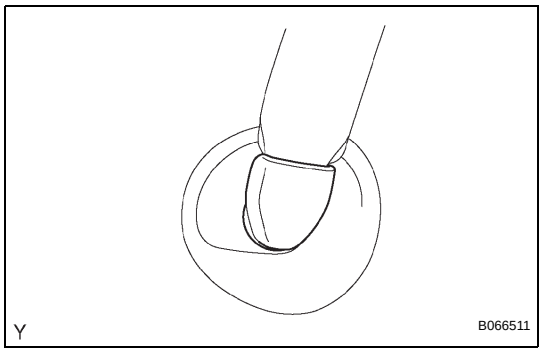

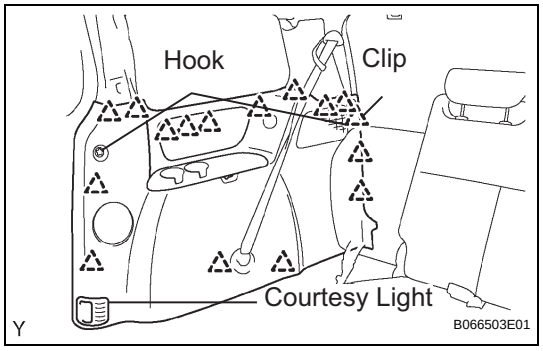

   (f) Using a screwdriver, disengage the 16 clips and remove the quarter trim panel assembly.
   HINT:
   Tape the screwdriver tip before use.
6. **REMOVE REAR WINDOW SIDE GARNISH ASSEMBLY (See page IR-10)**
7. **REMOVE NO. 1 REAR SEAT OUTER BELT ASSEMBLY (for 7-Passenger)**
   HINT:
   Refer to the instructions for disassembly of the rear No. 1 seat assembly (for captain seat type) (See page SE-69).
   (a) Remove the rear seatback board RH.
   (b) Remove the rear seat shoulder belt cover.
   (c) Remove the bolt, nut and No. 1 rear seat outer belt assembly.
8. **REMOVE 3 POINT TYPE REAR SEAT BELT ASSEMBLY (for 8-Passenger)**
   (a) Remove the nut and disconnect the 3 point type rear seat belt on the shoulder anchor side.
9. **REMOVE NO. 2 REAR SEAT OUTER BELT ASSEMBLY**
   (a) Using a screwdriver, disengage the 2 claws and remove the cover of the No. 2 rear seat outer belt assembly on the shoulder anchor side.
   HINT:
   Tape the screwdriver tip before use.
   (b) Remove the bolt and disconnect the No. 2 rear seat outer belt assembly on the shoulder anchor side.
   (c) Remove the bolt on the retractor side and remove the No. 2 rear seat outer belt assembly.

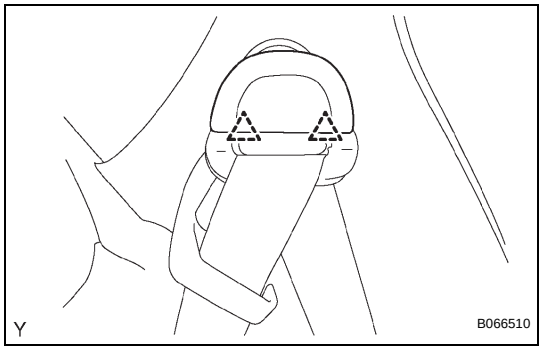

SB

SB

INSTALLATION

1. INSTALL NO. 2 REAR SEAT OUTER BELT ASSEMBLY
NOTICE:
Do not disassemble the retractor.

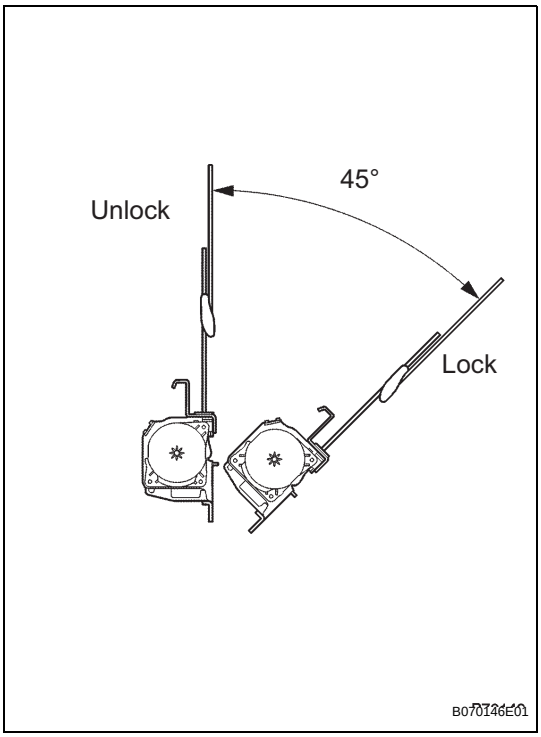

(a) Check the degree of tilt when the No. 2 rear seat outer belt assembly begins to lock the ELR.
  (1) Check that the belt does not lock within 15° of tilt in all directions but that the belt locks with over 45° of tilt, when gently moving the retractor.
  If operation is not as specified, replace the No. 2 rear seat outer belt assembly.
  (2) Install the No. 2 rear seat outer belt assembly with the bolt on the retractor side.
  Torque: Upper bolt
  8.5 N*m (87 kgf*cm, 75 in.*lbf)
  Lower bolt
  42 N*m (430 kgf*cm, 31 ft.*lbf)
  (3) Install the No. 2 rear seat outer belt assembly on the shoulder anchor side with the bolt.
  Torque: 42 N*m (430 kgf*cm, 31 ft.*lbf)

2. INSTALL 3 POINT TYPE REAR SEAT BELT ASSEMBLY (for 8-Passenger)
NOTICE:
Do not disassemble the retractor.

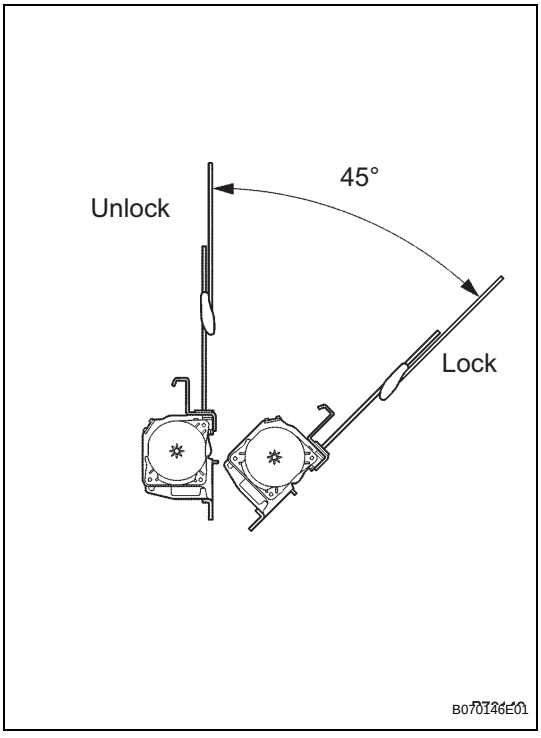

(a) Check the degree of tilt when the 3 point type rear seat belt assembly begins to lock the ELR.
  (1) Check that the 3 point type rear seat belt assembly does not lock within 15° of tilt in all directions but that the 3 point type rear seat belt assembly locks with over 45° of tilt, when gently moving the retractor.
  If operation is not as specified, replace the 3 point type rear seat belt assembly.
(b) Install the 3 point type rear seat belt assembly on the retractor side with the bolt.
  Torque: Upper bolt
  8.5 N*m (87 kgf*cm, 75 in.*lbf)
  Lower bolt
  42 N*m (430 kgf*cm, 31 ft.*lbf)

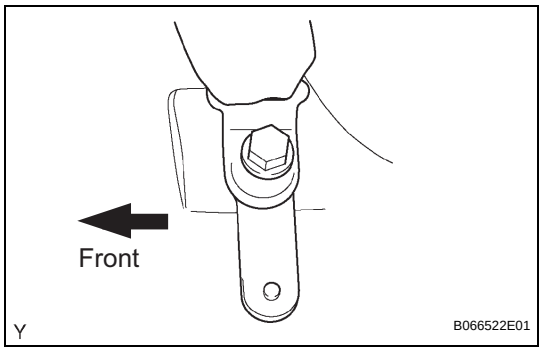

(c) Install the 3 point type rear seat belt assembly on the floor anchor side with the bolt.
Torque: 42 N*m (430 kgf*cm, 31 ft.*lbf)

(d) Check the ELR lock.
NOTICE:
The check should be performed with the assembly installed.
(1) Check that the 3 point type rear seat belt assembly locks when pulling out the belt quickly when the 3 point type rear seat belt assembly is installed.
If operation is not as specified, replace the belt 3 point type rear seat belt assembly.

(e) Check the fastening function of the child restraint system.
NOTICE:
The check should be performed with the assembly installed.
(1) Check that the belt cannot be pulled out any more but can be rewound after the belt is fully pulled out.
(2) Check that the belt can be pulled out and rewound after the belt is fully rewound.
If operation is not as specified, replace the 3 point type rear seat belt assembly.

SB

3. INSTALL NO. 1 REAR SEAT OUTER BELT ASSEMBLY (for 7-Passenger)

HINT:
Refer to the instructions for reassembly of the rear No. 1 seat assembly (for captain seat type) (See page SE-72).

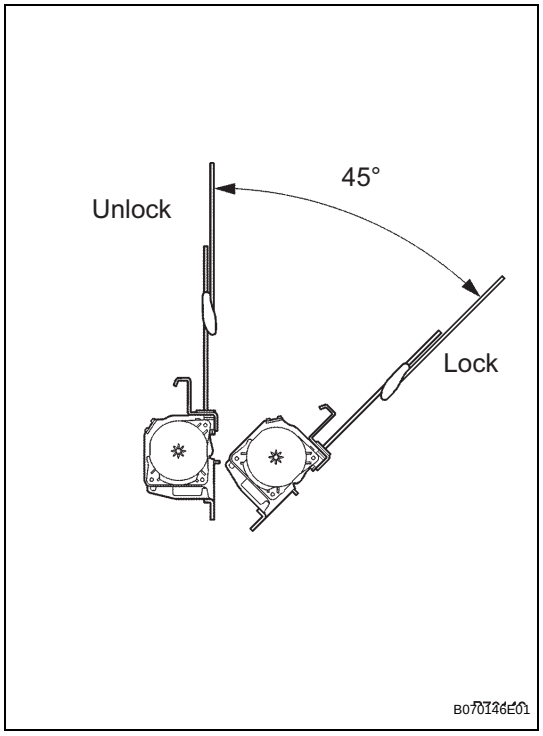

(a) Check the degree of tilt when the No. 1 rear seat outer belt assembly begins to lock the ELR.
(1) Check that the belt does not lock within 15° of tilt in all directions but that the belt locks with over 45° of tilt, when gently moving the retractor.
If operation is not as specified, replace the No. 1 rear seat outer belt assembly.

(b) Install the No. 1 rear seat outer belt assembly with the bolt and nut.
Torque: 42 N*m (430 kgf*cm, 31 ft.*lbf)

(c) Install the rear seat shoulder belt cover

(d) Install the rear seatback board RH

(e) Install the No. 1 rear seat outer belt assembly with the bolt.

(f) Check the ELR lock.
NOTICE:
The check should be performed with the assembly installed.
(1) Check that the belt locks when pulling out the belt quickly when the belt is installed.
If operation is not as specified, replace the No. 1 rear seat outer belt assembly assembly.

(g) Check the fastening function of the child restraint system.
NOTICE:
The check should be performed with the assembly installed.
(1) Check that the belt cannot be pulled out any more but can be rewound after the belt is fully pulled out.
(2) Check that the belt can be pulled out and rewound after the belt is fully rewound.
If operation is not as specified, replace the No. 1 rear seat outer belt assembly.

SB

4. INSTALL REAR WINDOW SIDE GARNISH ASSEMBLY

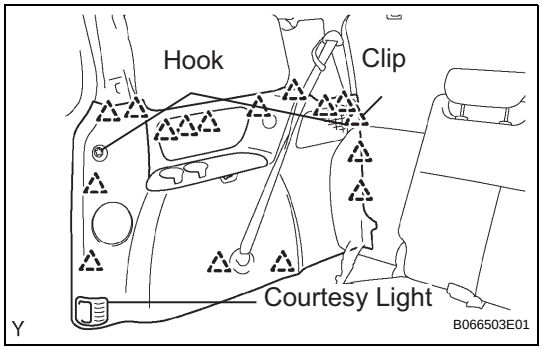

5. INSTALL FRONT QUARTER TRIM PANEL ASSEMBLY
(a) Engage the 16 clips to install the front quarter trim panel assembly.
(b) Connect the courtesy light connectors.
(c) Install the courtesy light.
(d) Install the 2 package holder net hooks.
(e) Install the No. 2 rear seat outer belt assembly on the floor anchor side with the bolt.
Torque: 42 N*m (430 kgf*cm, 31 ft.*lbf)
NOTICE:
Do not make the anchor part run onto the protrusion part of the floor panel.
(f) Install the floor anchor cover.
(g) Check the ELR lock.
NOTICE:
The check should be performed with the assembly installed.

6. INSTALL BACK DOOR SCUFF PLATE

7. INSTALL BACK DOOR WEATHERSTRIP

8. INSTALL REAR DOOR WEATHERSTRIP

9. INSTALL REAR DOOR SCUFF PLATE