DTC	B2795	Unmatched Key Code

DESCRIPTION

This DTC is output when a key with a code that has not been registered in the ECU is inserted into the ignition key cylinder.

DTC No.	DTC Detection Condition	Trouble Area
B2795	Key with unregistered key code is inserted.	Key

INSPECTION PROCEDURE

1	RE-REGISTER KEY

(a) Delete the DTC (See page EI-15).
(b) Re-register the key (See page EI-4) and insert this key into the ignition key cylinder.
Check that the engine starts with the key.
OK:
The engine starts

OK → **END**

NG

REPLACE KEY

DTC	B2796	No Communication in Immobiliser System

DTC	B2798	Communication Malfunction No. 2

DESCRIPTION

These codes are stored in the memory when a key that does not have a transponder chip is inserted or if communication between the key and transponder key ECU is impossible.

DTC No.	DTC Detection Condition	Trouble Area
B2796	No communication	• Key • Wire harness • Transponder key amplifier • Transponder key ECU assembly
B2798	Communication error	• Key

WIRING DIAGRAM

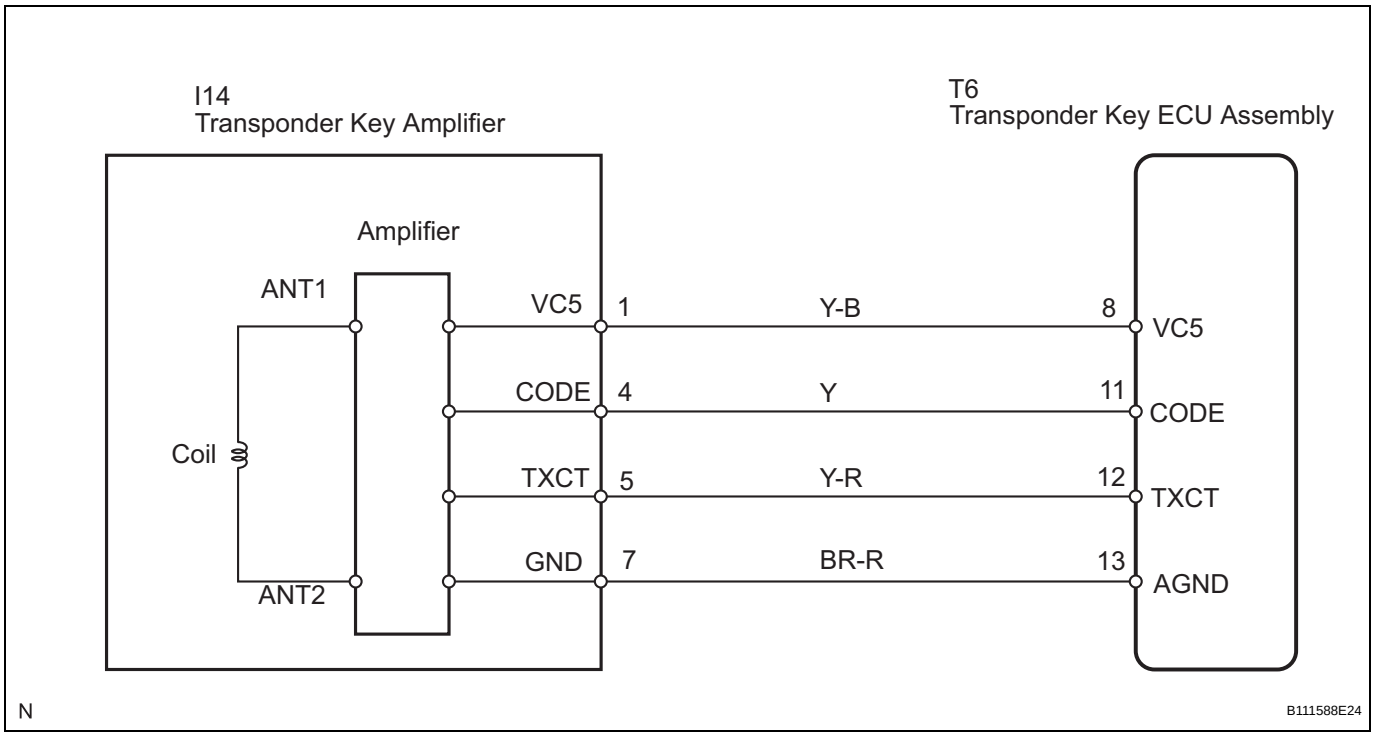

INSPECTION PROCEDURE

1	READ VALUE OF INTELLIGENT TESTER

(a) Connect the intelligent tester (with CAN VIM) to the DLC3.
(b) Turn the ignition switch on and turn the intelligent tester main switch on.

(c) Select IMMOBILISER in the DATA LIST and read the value displayed on the intelligent tester.

Transponder key ECU:

Item	Measurement Item/Display (Range)	Normal Condition	Diagnostic Note
IMMOBILISER	Immobiliser system status / SET or UNSET	UNSET: Ignition switch on SET: Without key	-

OK:

UNSET (Ignition switch on) appears on the screen.

OK → **REPLACE TRANSPONDER KEY ECU ASSEMBLY**

NG

2	CHECK KEYS

(a) Insert the vehicle's other key into the ignition key cylinder.

(b) Check that the engine starts with this key.

OK:

The engine starts

OK → **RE-REGISTER OR REPLACE KEY**

NG

3	READ VALUE OF INTELLIGENT TESTER

(a) Connect the intelligent tester (with CAN VIM) to the DLC3.

(b) Turn the ignition switch on and turn the intelligent tester main switch on.

(c) Select ANTENNA COIL in the DATA LIST and read the value displayed on the intelligent tester.

Transponder key ECU:

Item	Measurement Item/Display (Range)	Normal Condition	Diagnostic Note
ANTENNA COIL	Antenna coil condition /NORMAL or FAIL	NORMAL: Antenna coil is normal. FAIL: Antenna coil is malfunctioning.	-

OK:

NORMAL (Antenna coil is normal) appears on the screen.

OK → **REPLACE TRANSPONDER KEY ECU ASSEMBLY**

NG

4 CHECK HARNESS AND CONNECTOR (TRANSPONDER KEY ECU ASSEMBLY - TRANSPONDER KEY AMPLIFIER)

Wire Harness Side Connector Front View:

T6 Transponder Key ECU Assembly

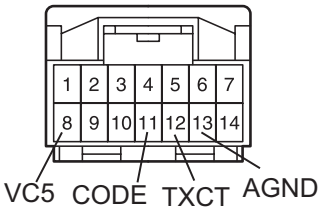

I14 Transponder Key Amplifier

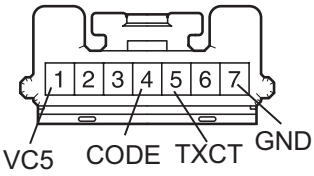

P B111591E06

(a) Disconnect the T6 ECU and I14 amplifier connectors.
(b) Measure the resistance according to the value(s) in the table below.

Resistance

Tester Connection	Specified Condition
T6-8 (VC5) - I14-1 (VC5)	Below 1 Ω
T6-11 (CODE) - I14-4 (CODE)	
T6-12 (TXCT) - I14-5 (TXCT)	
T6-13 (AGND) - I14-7 (GND)	
T6-8 (VC5) - Body ground	10 kΩ or higher
T6-11 (CODE) - Body ground	
T6-12 (TXCT) - Body ground	
T6-13 (AGND) - Body ground	

NG → **REPAIR OR REPLACE HARNESS OR CONNECTOR**

OK

5 INSPECT TRANSPONDER KEY ECU ASSEMBLY

Wire Harness Side Connector Rear View:

T6
Transponder Key ECU Assembly

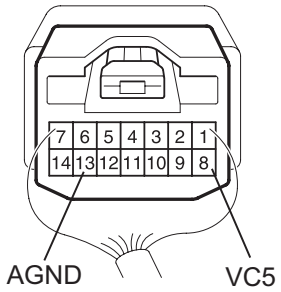

P B111616E11

(a) Reconnect the T6 ECU and I14 amplifier connectors.
(b) Measure the voltage according to the value(s) in the table below.

Voltage

Tester Connection	Condition	Specified Condition
T6-8 (VC5) - Body ground	No key is in ignition key cylinder	Below 1 V
	Key is in ignition key cylinder	4.6 to 5.4 V

(c) Measure the resistance according to the value(s) in the table below.

Resistance

Tester Connection	Condition	Specified Condition
T6-13 (AGND) - Body ground	Always	Below 1 Ω

NG → **REPLACE TRANSPONDER KEY ECU ASSEMBLY**

OK

6	REPLACE TRANSPONDER KEY AMPLIFIER

(a) After replacing the transponder key amplifier with a normally functioning transponder key amplifier, check that the engine starts.
OK:
The engine starts.

NG → **REPLACE TRANSPONDER KEY ECU ASSEMBLY**

OK ↓

END (TRANSPONDER KEY AMPLIFIER DEFECTIVE)