Distance Control ECU Power Source Circuit

DESCRIPTION

This circuit provides power to operate the distance control ECU. The distance control ECU determines information about the vehicle in front based on data from the laser sensor, and then decides how much acceleration and/or deceleration is needed to maintain the set distance. The distance control ECU also requests the skid control ECU to apply braking and to sound the buzzer.

WIRING DIAGRAM

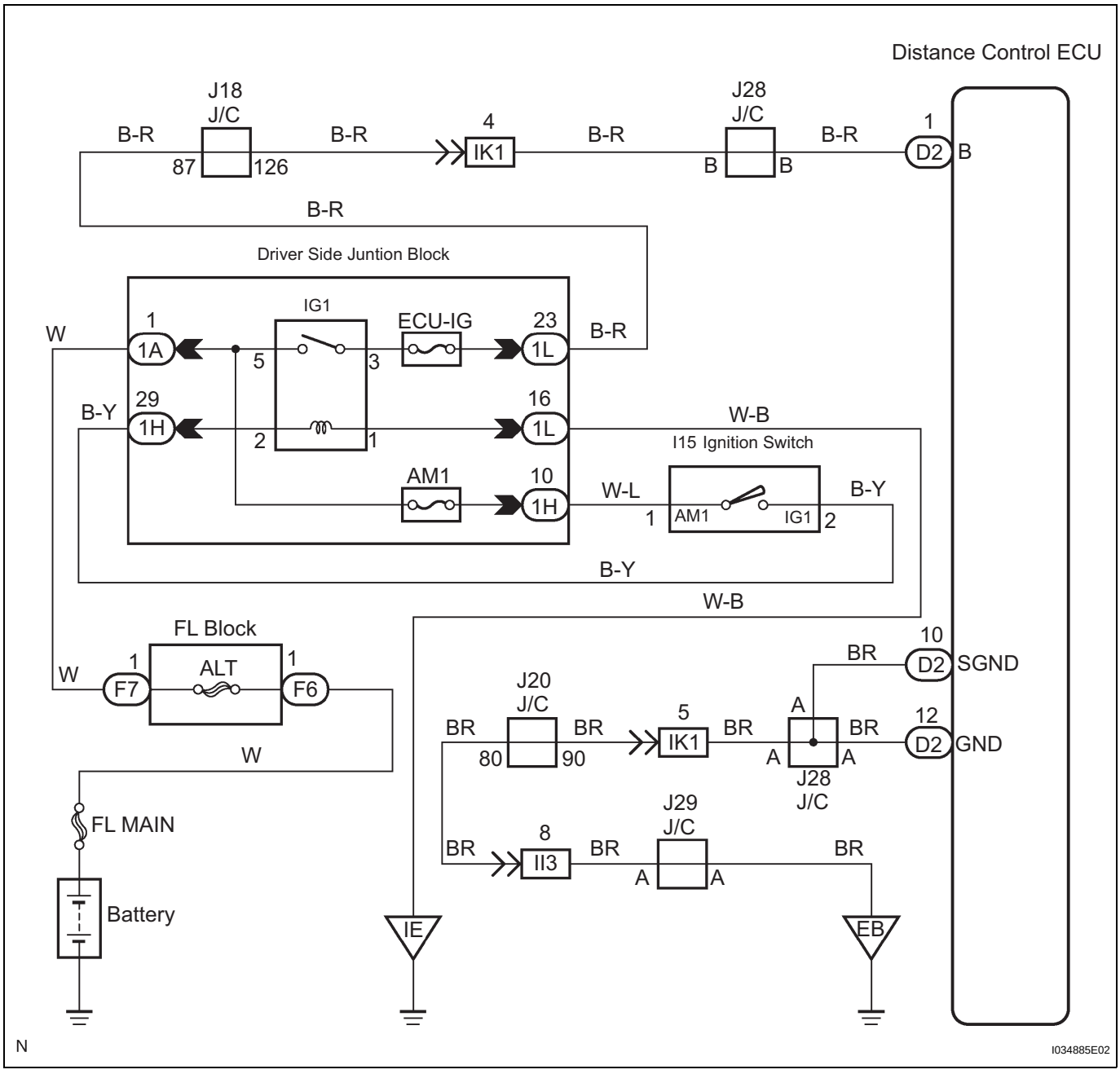

INSPECTION PROCEDURE

1	CHECK HARNESS AND CONNECTOR

Distance Control ECU Wire Harness View:

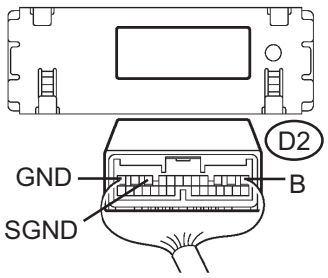

(a) Disconnect the D2 distance control ECU connector.
(b) Measure the voltage according to the value(s) in the table below.

Standard voltage

Tester Connection	Condition	Specified Condition
D2-1 (B) - Body ground	Ignition switch on	10 to 14 V

(c) Measure the resistance according to the value(s) in the table below.

Standard resistance

Tester Connection	Condition	Specified Condition
D2-10 (SGND) - Body ground	Always	Below 1 Ω
D2-12 (GND) - Body ground	Always	Below 1 Ω

CC

NG → **REPAIR OR REPLACE HARNESS OR CONNECTOR**

OK

PROCEED TO NEXT CIRCUIT INSPECTION SHOWN IN PROBLEM SYMPTOMS TABLE (See page CC-52)