Distance Control Switch Circuit

DESCRIPTION

The distance control switch sets the vehicle-to-vehicle distance mode. The distance control switch is installed in the steering pad switch. The vehicle-to-vehicle distance set value can be changed by operating the steering pad switch (distance control switch) while the dynamic laser cruise control system is in operation.

WIRING DIAGRAM

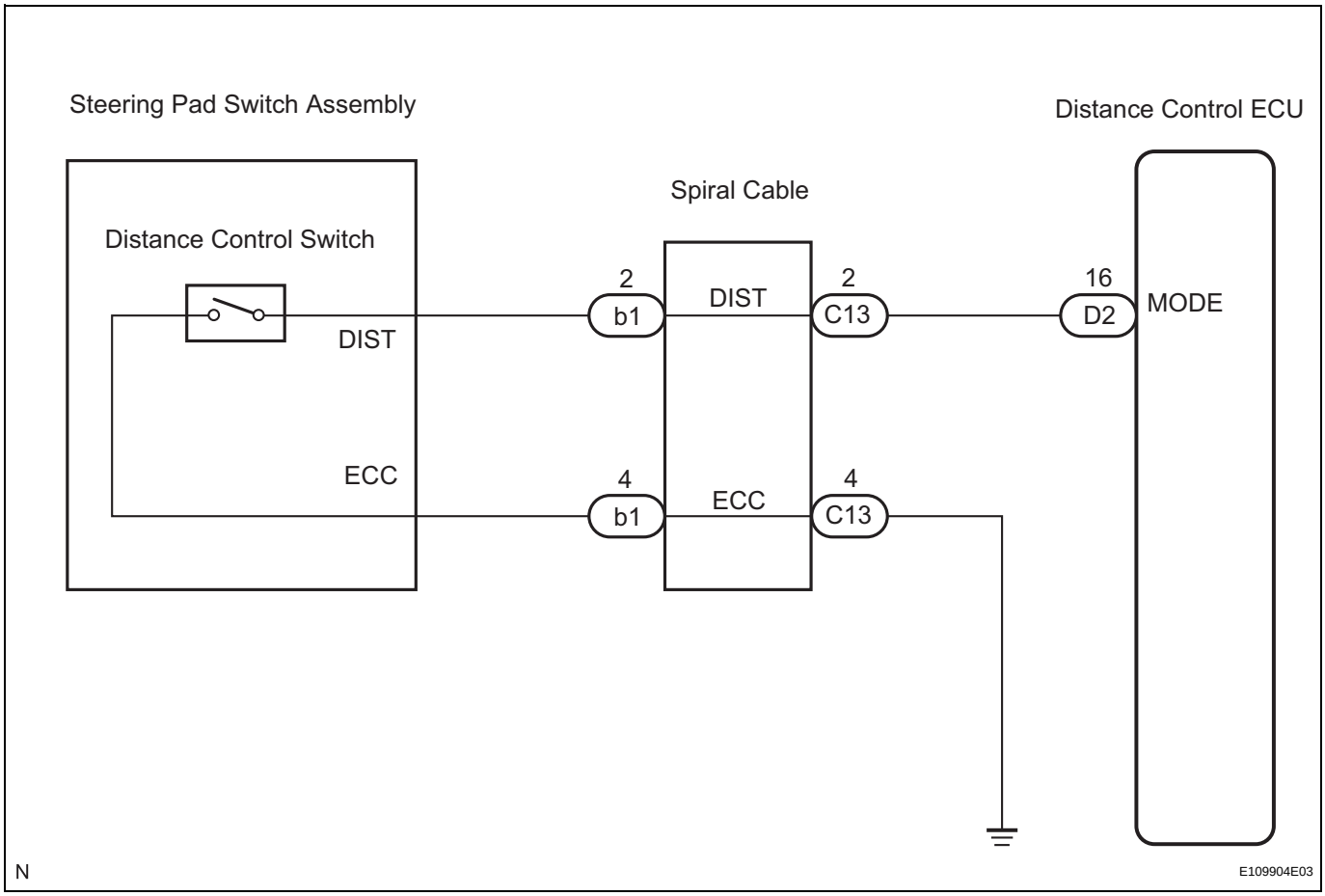

INSPECTION PROCEDURE

1	**INSPECT STEERING PAD SWITCH ASSEMBLY**

(a) Remove the steering pad switch assembly (See page AV-198).

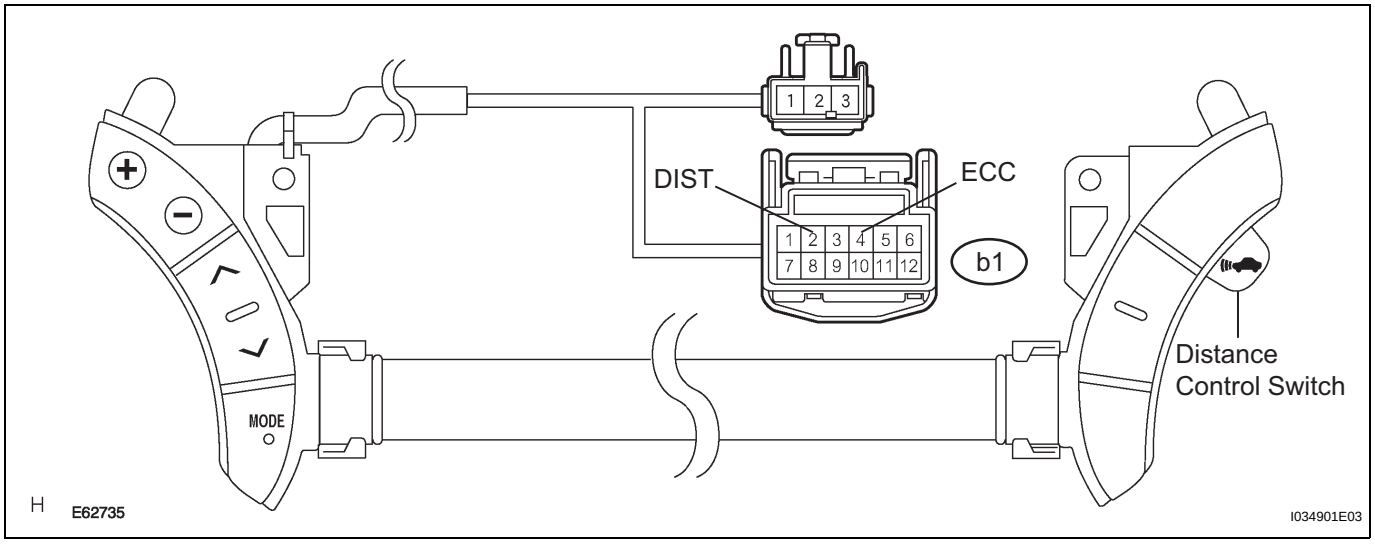

(b) Measure the resistance according to the value(s) in the table below.

Standard resistance

Tester Connection	Switch Condition	Specified Condition
b1-2 (DIST) - b1-4 (ECC)	Distance control switch is ON	Below 1 Ω
	Distance control switch is OFF	10 kΩ or higher

HINT:
When a malfunction is detected in the distance control switch, replace the steering pad switch assembly.

NG → **REPLACE STEERING PAD SWITCH ASSEMBLY (See page AV-198)**

OK

2	INSPECT SPIRAL CABLE

NOTICE:
The spiral cable is an important part of the SRS airbag system. Incorrect removal or installation of the spiral cable may cause airbag deployment. Be sure to read the page shown in the brackets.

HINT:

- Removal (See page RS-434)
- Installation (See page RS-434)

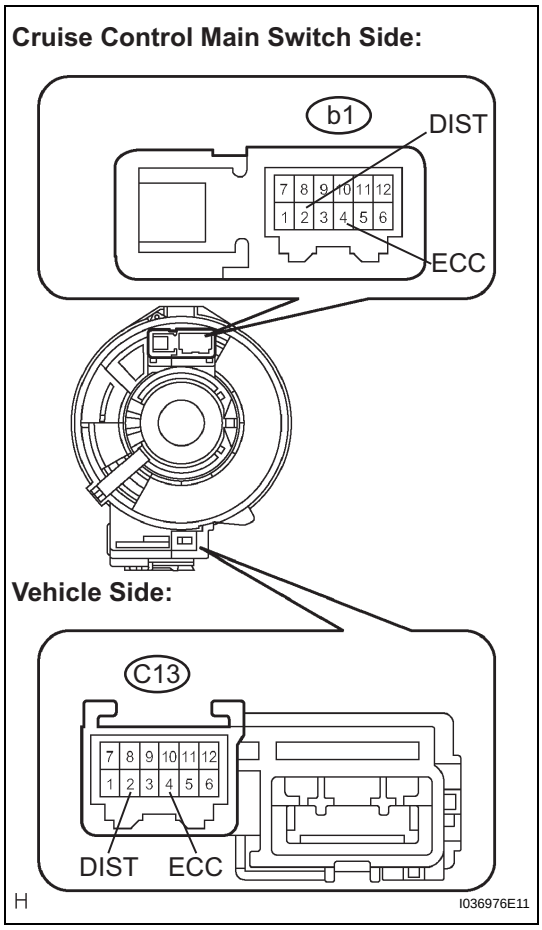

(a) Remove the spiral cable.
(b) Measure the resistance according to the value(s) in the table below.

Standard resistance

Tester Condition	Spiral Cable Position	Specified Condition
b1-2 (DIST) - C13-2 (DIST)	Center	Below 1 Ω
	2.5 rotations to the left	
	2.5 rotations to the right	
b1-4 (ECC) - C13-4 (ECC)	Center	Below 1 Ω
	2.5 rotations to the left	
	2.5 rotations to the right	

HINT:
The spiral cable makes a maximum of approximately 5 rotations.

NG → **REPLACE SPIRAL CABLE (See page RS-434)**

OK

CC

3 CHECK HARNESS AND CONNECTOR (DISTANCE CONTROL ECU - SPIRAL CABLE)

Distance Control ECU Connector
Wire Harness View:

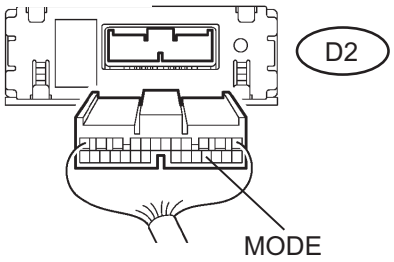

Spiral Cable Connector
Wire Harness View:

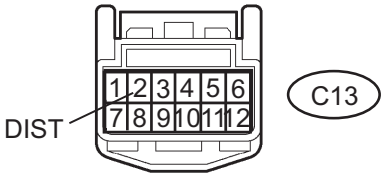

E109734E10

(a) Disconnect the D2 distance control ECU connector.
(b) Measure the resistance according to the value(s) in the table below.

Standard resistance

Tester Connection	Condition	Specified Condition
C13-2 (DIST) - D2-16 (MODE)	Always	Below 1 Ω
D2-16 (MODE) - Body ground	Always	10 kΩ or higher

NG → **REPAIR OR REPLACE HARNESS OR CONNECTOR**

OK

4 CHECK HARNESS AND CONNECTOR (SPIRAL CABLE - BODY GROUND)

Vehicle Side Connector Front View:

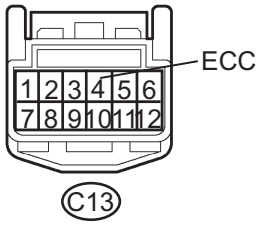

N

E107092E13

(a) Measure the resistance according to the value(s) in the table below.

Standard resistance

Tester Connection	Condition	Specified Condition
C13-4 (ECC) - Body ground	Always	Below 1 Ω

NG → **REPAIR OR REPLACE HARNESS OR CONNECTOR**

OK

CC

5	INSPECT DISTANCE CONTROL ECU

Distance Control ECU Wire Harness View:

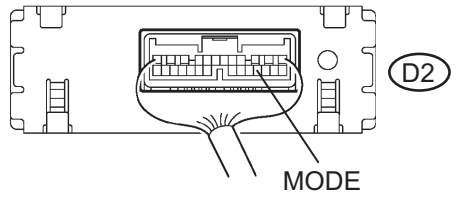

N I034909E42

(a) Remove the distance control ECU with the connector.
(b) Turn the ignition switch to the ON position.
(c) Measure the voltage according to the value(s) in the table below.

Standard voltage

Tester Connection	Condition	Specified Condition
D2-16 (MODE) - Body ground	Distance control switch ON	0 to 2 V
D2-16 (MODE) - Body ground	Distance control switch OFF	10 to 14 V

NG → **REPLACE DISTANCE CONTROL ECU (See page CC-124)**

OK

PROCEED TO NEXT CIRCUIT INSPECTION SHOWN IN PROBLEM SYMPTOMS TABLE (See page CC-52)