# Laser Sensor Power Source Circuit

## DESCRIPTION

This circuit provides power to the laser sensor. The laser sensor emits radio waves towards an object in front and measures the distance and direction of the object by receiving the beam reflections. Based on the reflections, the sensor calculates the difference in speed between the vehicle and the object in front. This data is transmitted to the distance control ECU. The ECM recognizes the laser sensor via terminals LGND. If an open circuit occurs in the wire harness between terminals LGND, the ECM cannot recognize the laser sensor. The ECM will stop the control of the vehicle-to-vehicle distance control mode and only the constant speed control mode can be used.

## WIRING DIAGRAM

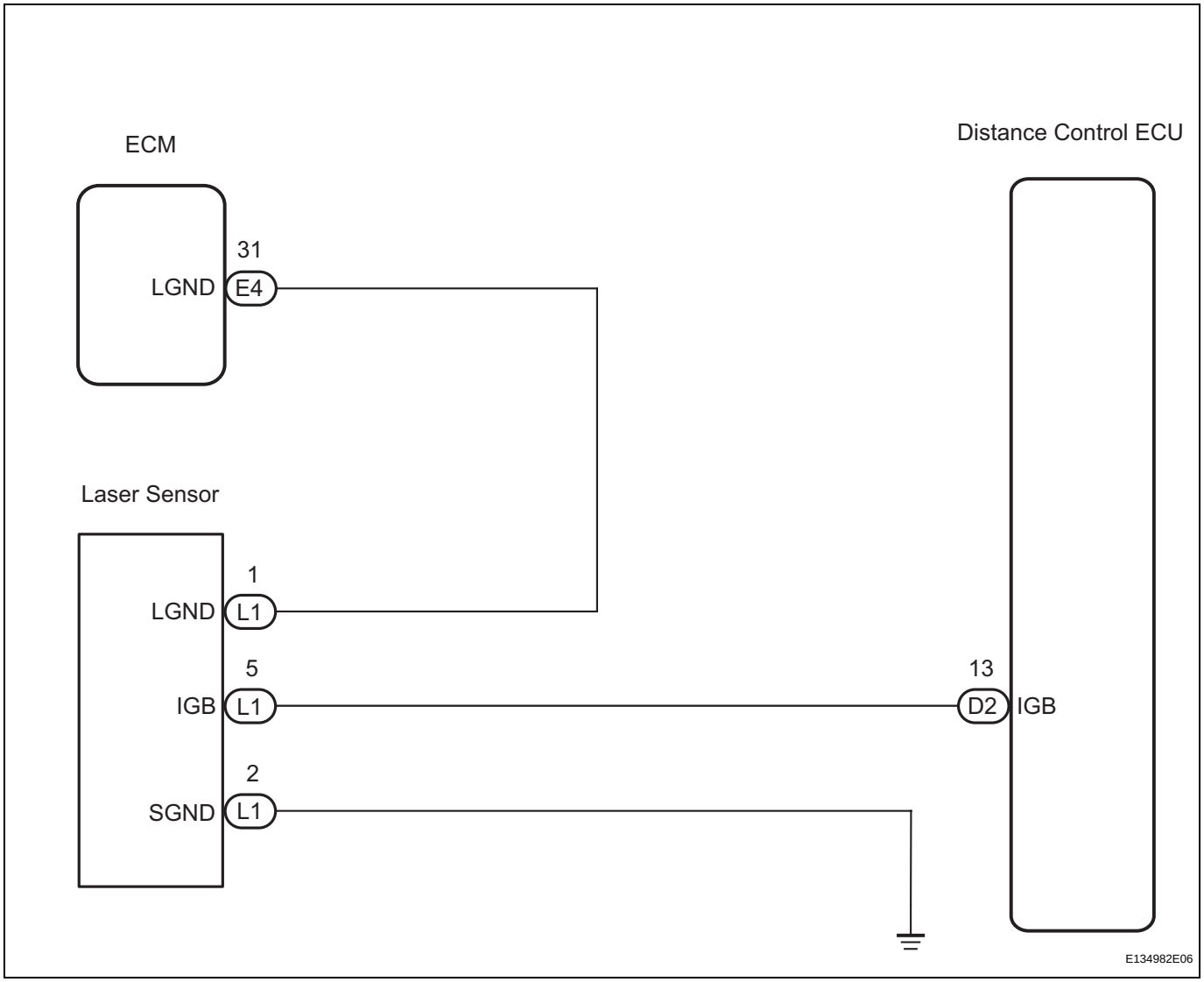

## INSPECTION PROCEDURE

### 1 CHECK DISTANCE CONTROL ECU (IGB VOLTAGE)

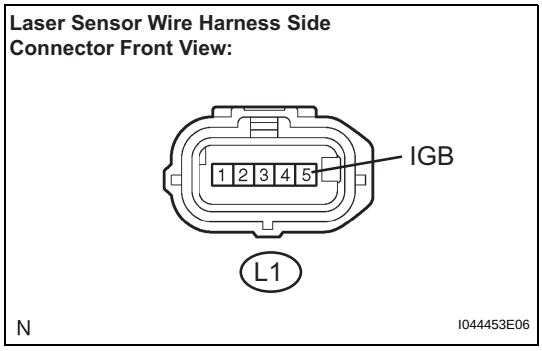


(a) Disconnect the L1 laser sensor connector.
(b) Measure the voltage according to the value(s) in the table below.

**Standard voltage**

| Tester Connection | Condition | Specified Condition |
|---|---|---|
| L1-5 (IGB) - Body ground | Ignition switch on | 10 to 14 V |

NG → **Go to step 3**

OK

CC

### 2 CHECK HARNESS AND CONNECTOR (LASER SENSOR - ECM AND BODY GROUND)

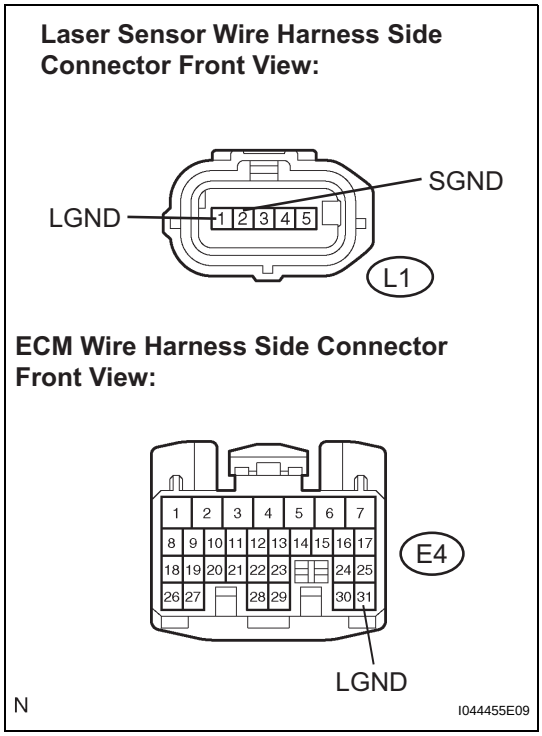


(a) Disconnect the E4 connector from the ECM.
(b) Measure the resistance according to the value(s) in the table below.

**Standard resistance**

| Tester Connection | Condition | Specified Condition |
|---|---|---|
| E4-31 (LGND) - L1-1 (LGND) | Always | Below 1 Ω |
| L1-1 (LGND) - Body ground | Always | 10 kΩ or higher |
| L1-2 (SGND) - Body ground | Always | Below 1 Ω |

NG → **REPAIR OR REPLACE HARNESS OR CONNECTOR**

OK

**PROCEED TO NEXT CIRCUIT INSPECTION SHOWN IN PROBLEM SYMPTOMS TABLE (See page CC-52)**

| 3 | CHECK HARNESS AND CONNECTOR (LASER SENSOR - DISTANCE CONTROL ECU) |
|---|---|

**Laser Sensor Wire Harness Side Connector Front View:**

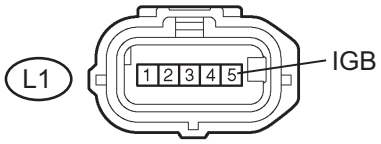


**Distance Control ECU Wire Harness Side Connector Front View:**

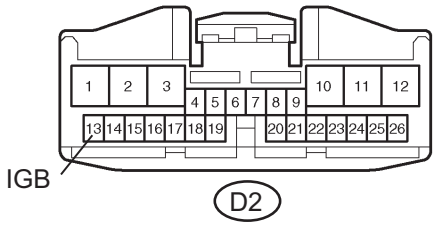


N

I044456E07

(a) Disconnect the D2 distance control ECU connector.
(b) Measure the resistance according to the value(s) in the table below.

**Standard resistance**

| Tester Connection | Condition | Specified Condition |
|---|---|---|
| L1-5 (IGB) - D2-13 (IGB) | Always | Below 1 Ω |
| D2-13 (IGB) - Body ground | Always | 10 kΩ or higher |

NG → **REPAIR OR REPLACE HARNESS OR CONNECTOR**

OK

**REPLACE DISTANCE CONTROL ECU (See page CC-124)**

CC