DTC	P0571	Stop Light Switch Circuit Malfunction

DESCRIPTION

The ECM receives the brake demand signal from the distance control ECU and transmits it to the skid control ECU (brake actuator assembly).
The skid control ECU (brake actuator assembly) receives a signal from the ECM and operates the brake actuator.
The skid control ECU (brake actuator assembly) operates the brake actuator and illuminates the stop light by operating the BRK relay at the same time.

DTC No.	DTC Detection Condition	Trouble Area
P0571	This trouble code is output when the ECM detected the BRK relay error signal from the skid control ECU for 0.2 sec. or more while the dynamic cruise control is in operation.	• BRK relay • BRK relay circuit • Skid control ECU

WIRING DIAGRAM

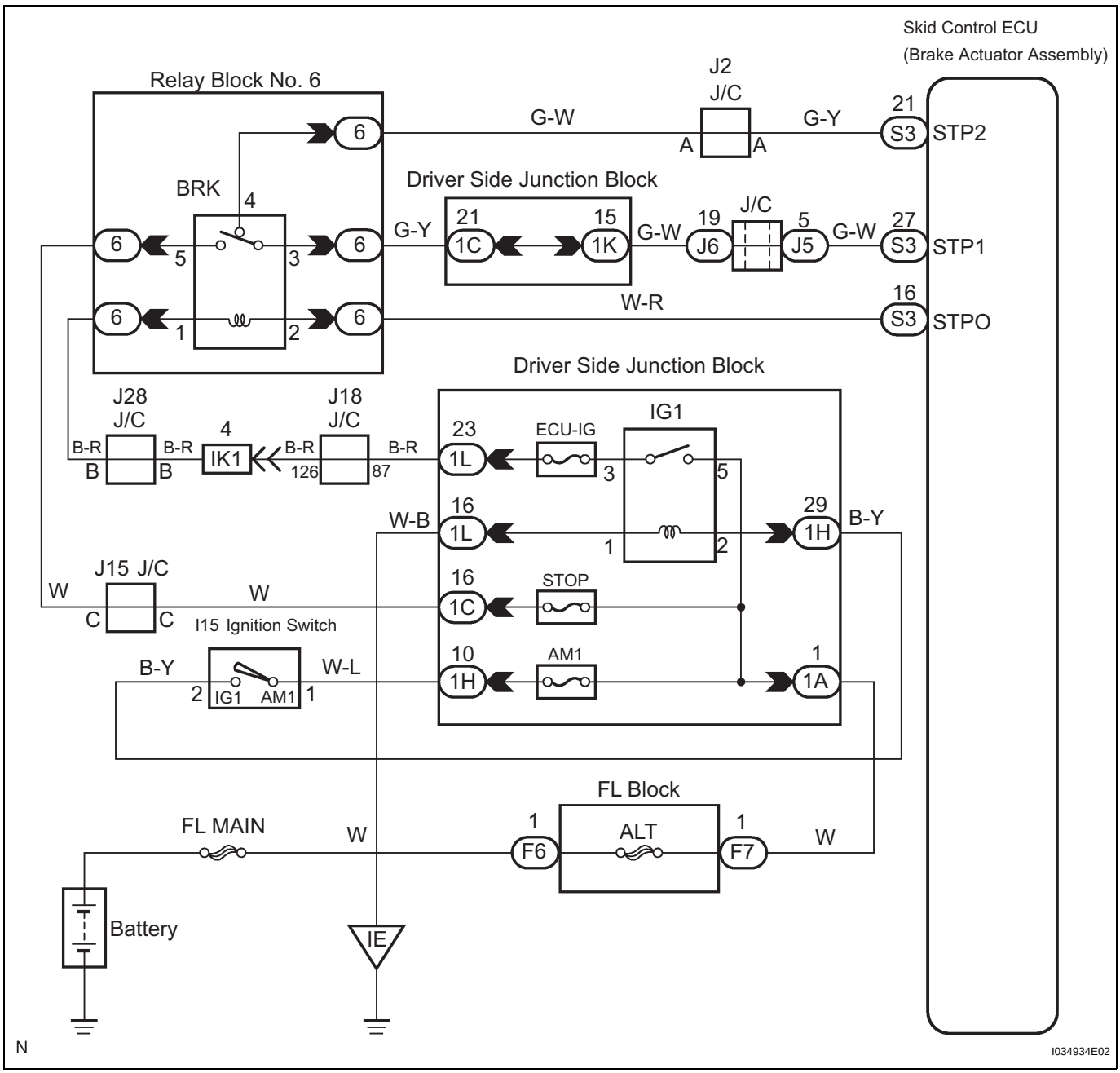

INSPECTION PROCEDURE

1	CHECK BRK RELAY

BRK Relay:

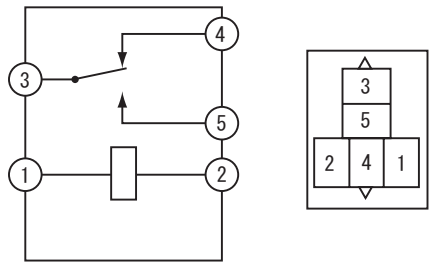

C126459E02

(a) Remove the BRK relay from the Relay Block No. 6.
(b) Measure the resistance according to the value(s) in the table below.

Standard resistance

Tester Connection	Specified Condition
1 - 2	Below 1 Ω
3 - 4	Below 1 Ω
3 - 5	10 kΩ or higher

(c) Apply battery voltage between terminals 1 and 2.
(d) Measure the resistance according to the value(s) in the table below.

Standard resistance

Tester Connection	Specified Condition
3 - 5	Below 1 Ω

CC

NG → **REPLACE BRK RELAY**

OK

2	CHECK HARNESS AND CONNECTOR (BRK RELAY - BATTERY)

(a) Disconnect the connector from the Relay Block No. 6.
(b) Measure the voltage according to the value(s) in the table below.

Standard voltage

Tester Connection	Condition	Specified Condition
5 - Body ground	Ignition switch on	10 to 14 V
5 - Body ground	Ignition switch off	Below 1 V
1 - Body ground	Ignition switch on	10 to 14 V
1 - Body ground	Ignition switch off	Below 1 V

NG → **REPAIR OR REPLACE HARNESS OR CONNECTOR**

OK

3	CHECK HARNESS AND CONNECTOR (BRK RELAY - SKID CONTROL ECU)

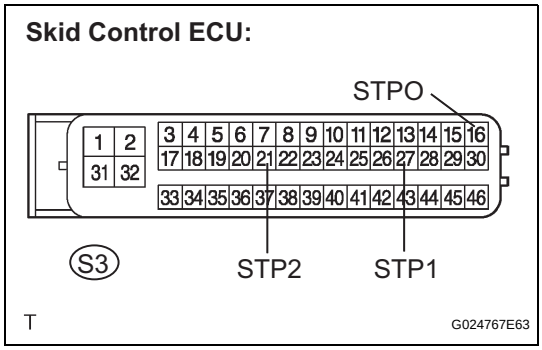

(a) Disconnect the S3 connector from the skid control ECU.
(b) Measure the resistance according to the value(s) in the table below.

Standard resistance

Tester Connection	Condition	Specified Condition
4 - S3-21 (STP2)	Always	Below 1 Ω
4 - Body ground	Always	10 kΩ or higher
3 - S3-27 (STP1)	Always	Below 1 Ω
3 - Body ground	Always	10 kΩ or higher
2 - S3-16 (STPO)	Always	Below 1 Ω
2 - Body ground	Always	10 kΩ or higher

NG → **REPAIR OR REPLACE HARNESS OR CONNECTOR**

CC

OK

REPLACE BRAKE ACTUATOR ASSEMBLY (See page BC-179)