Cruise Control Switch Circuit

DESCRIPTION

The cruise control main switch operates 8 functions: SET, - (COAST), TAP-DOWN, RES (RESUME), + (ACCEL), TAP-UP, CANCEL, and MODE. The SET, TAP-DOWN, and - (COAST) functions, and the RES (RESUME), TAP-UP, and + (ACCEL) functions are operated with the same switch. The cruise control main switch is an automatic return type switch which turns on only while operating it in the direction of each arrow and turns off after releasing it. The internal contact point of the cruise control main switch is turned on with the switch operation. The ECM then reads the voltage value that has been changed by the switch operation to control MODE, SET, - (COAST), RES (RESUME), + (ACCEL), and CANCEL. The dynamic laser cruise control system has two cruise control modes: the constant speed control mode and vehicle-to-vehicle distance control mode.

- The vehicle-to-vehicle distance control mode is always selected when starting up the dynamic laser cruise control system.
- The operation of the constant speed control mode is the same as that for a conventional cruise control system.

CC

WIRING DIAGRAM

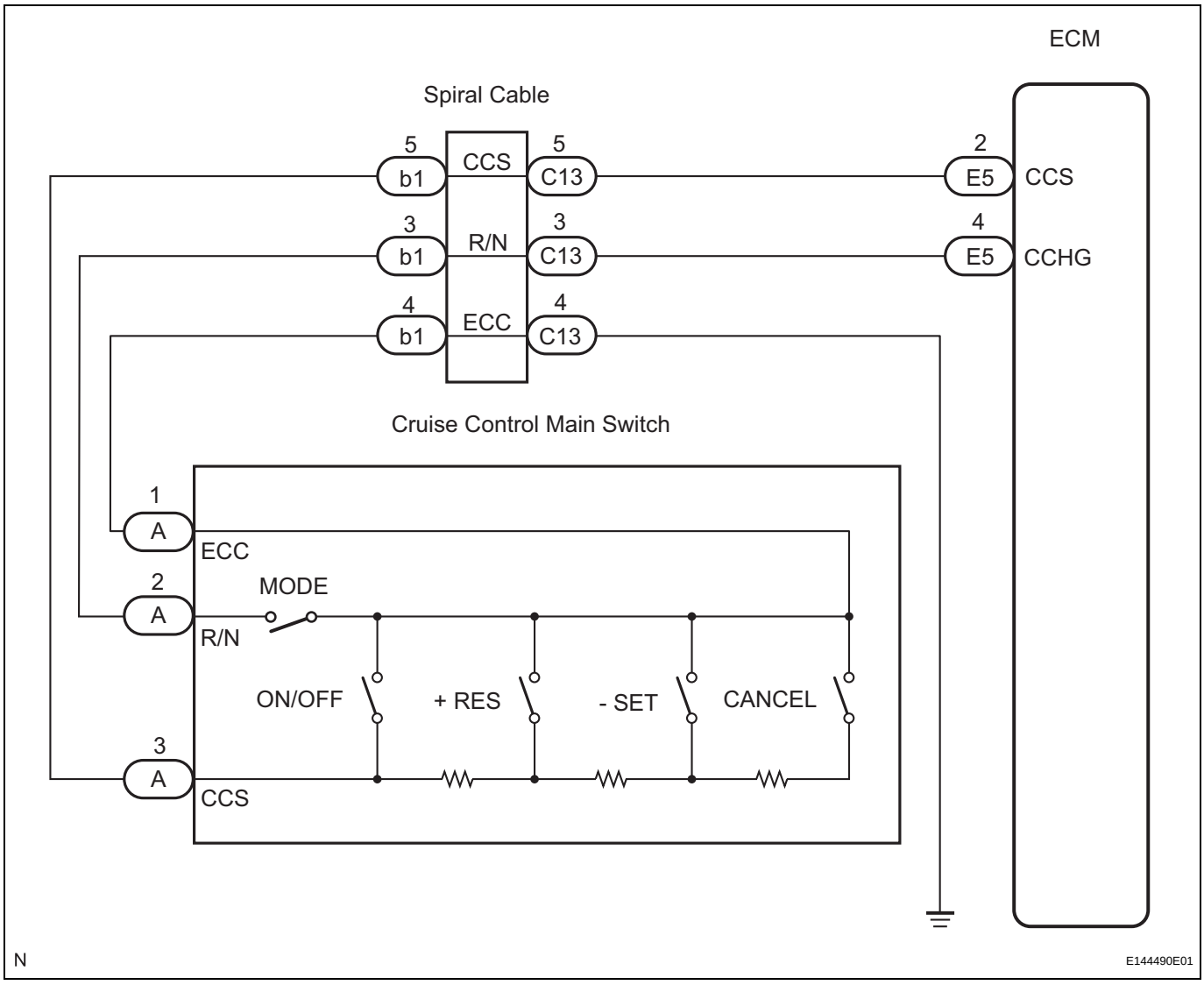

INSPECTION PROCEDURE

1	READ VALUE OF INTELLIGENT TESTER

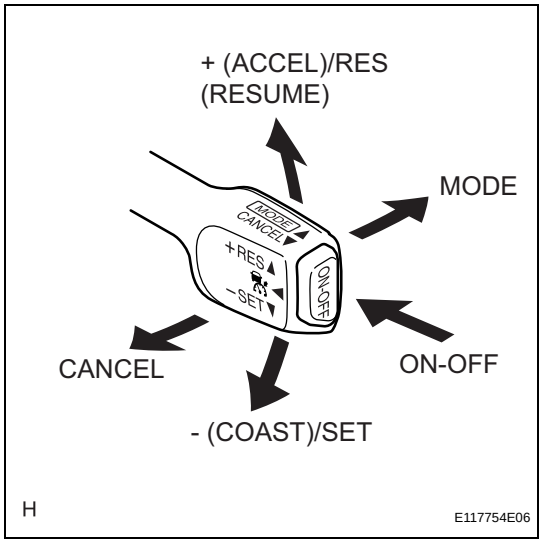

(a) Connect the intelligent tester to the DLC3.
(b) Turn the ignition switch to the ON position and turn the intelligent tester main switch on.
(c) Check the DATA LIST for proper functioning of the cruise control main switch.

ECM (Cruise control):

Tester Display	Measurement Item/Range	Normal Condition	Diagnostic Note
MAIN SW (MAIN)	Main switch signal (Main CPU) / ON or OFF	ON: Main switch ON OFF: Main switch OFF	-
CANCEL SW	CANCEL switch signal / ON or OFF	ON: CANCEL switch ON OFF: CANCEL switch OFF	-
SET/COAST SW	SET/COAST switch signal / ON or OFF	ON: - (COAST)/SET switch ON OFF: - (COAST)/SET switch OFF	-
RES/ACC SW	RES/ACC switch signal / ON or OFF	ON: + (ACCEL)/RES (RESUME) switch ON OFF: + (ACCEL)/RES (RESUME) switch OFF	-

OK:
When the cruise control main switch is operated, the display changes as shown above.

Result

Result	Proceed to
OK	A
NG (all items are defective)	B
NG (1 to 3 items are defective)	C

A → **PROCEED TO NEXT CIRCUIT INSPECTION SHOWN IN PROBLEM SYMPTOMS TABLE (See page CC-52)**

C → **REPLACE CRUISE CONTROL MAIN SWITCH (See page CC-120)**

B

CC

2	INSPECT CRUISE CONTROL MAIN SWITCH

(a) Remove the cruise control main switch (See page CC-120).

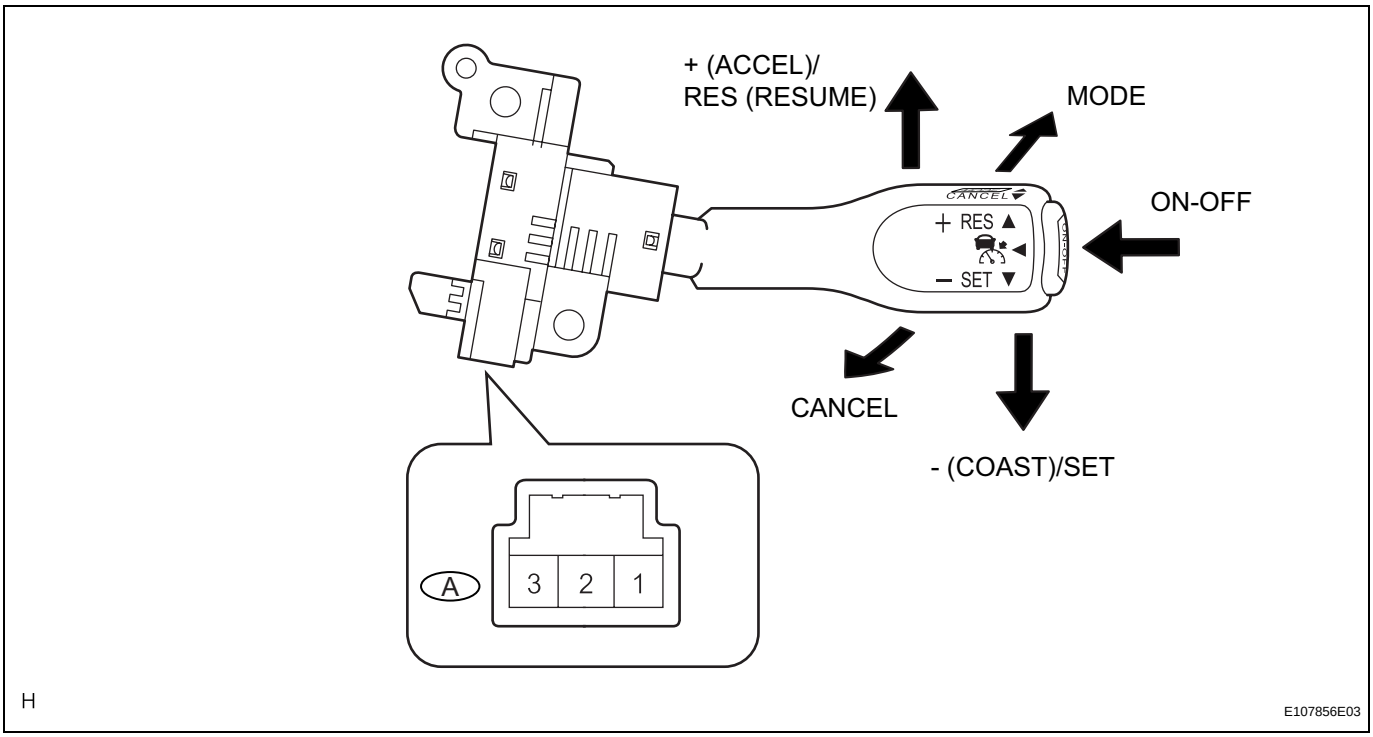

(b) Measure the resistance according to the value(s) in the table below.

Standard resistance

Tester Connection	Switch Condition	Specified Condition
A-1 (ECC) - A-2 (R/N) A-1 (ECC) - A-3 (CCS)	Neutral	10 kΩ or higher
A-1 (ECC) - A-3 (CCS)	+ (ACCEL)/RES (RESUME)	216 to 264 Ω
A-1 (ECC) - A-3 (CCS)	- (COAST)/SET	567 to 693 Ω
A-1 (ECC) - A-3 (CCS)	CANCEL	1386 to 1694 Ω
A-1 (ECC) - A-3 (CCS)	Main switch on	Below 1 Ω
A-1 (ECC) - A-2 (R/N)	Main switch on and MODE switch on	Below 1 Ω

NG → **REPLACE CRUISE CONTROL MAIN SWITCH (See page CC-120)**

OK

3	INSPECT HARNESS AND CONNECTOR (CRUISE CONTROL MAIN SWITCH - SPIRAL CABLE)

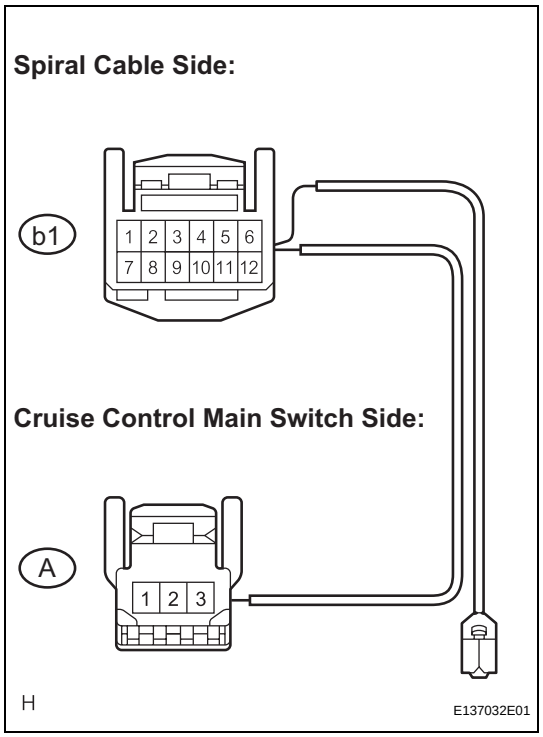

(a) Disconnect the b1 connector from the spiral cable.
(b) Measure the resistance according to the value(s) in the table below.

Standard resistance

Tester Connection	Condition	Specified Condition
A-3 - b1-5	Always	Below 1 Ω
A-1 - b1-4	Always	Below 1 Ω
A-2 - b1-3	Always	Below 1 Ω

NG → **REPAIR OR REPLACE HARNESS OR CONNECTOR**

OK

4	INSPECT SPIRAL CABLE

NOTICE:
The spiral cable is an important part of the SRS airbag system. Incorrect removal or installation of the spiral cable may prevent the airbag from deploying. Be sure to read the page shown in the brackets.

HINT:

- Removal (See page RS-434)
- Installation (See page RS-434)

CC

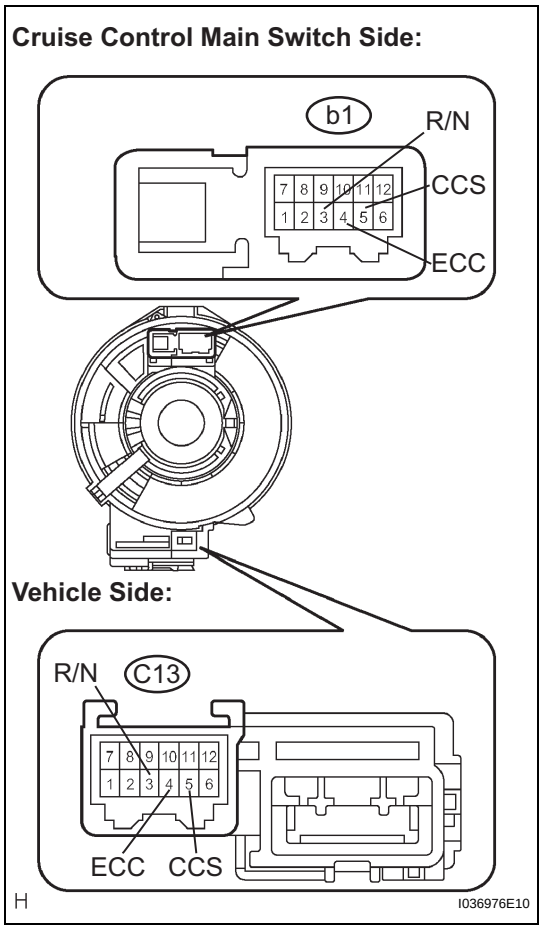

(a) Remove the spiral cable.
(b) Measure the resistance according to the value(s) in the table below.

Standard resistance

Tester Condition	Spiral Cable Position	Specified Condition
b1-3 (R/N) - C13-3 (R/N)	Center	Below 1 Ω
	2.5 rotations to the left	
	2.5 rotations to the right	
b1-5 (CCS) - C13-5 (CCS)	Center	Below 1 Ω
	2.5 rotations to the left	
	2.5 rotations to the right	
b1-4 (ECC) - C13-4 (ECC)	Center	Below 1 Ω
	2.5 rotations to the left	
	2.5 rotations to the right	

HINT:
The spiral cable makes a maximum of approximately 5 rotations.

NG → **REPLACE SPIRAL CABLE (See page RS-434)**

OK

5	CHECK HARNESS AND CONNECTOR (SPIRAL CABLE - ECM)

Vehicle Side Connector Front View:

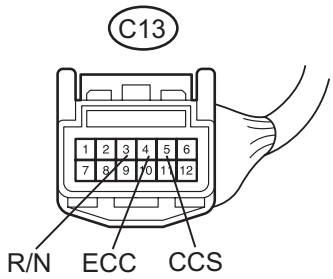

ECM Wire Harness View:

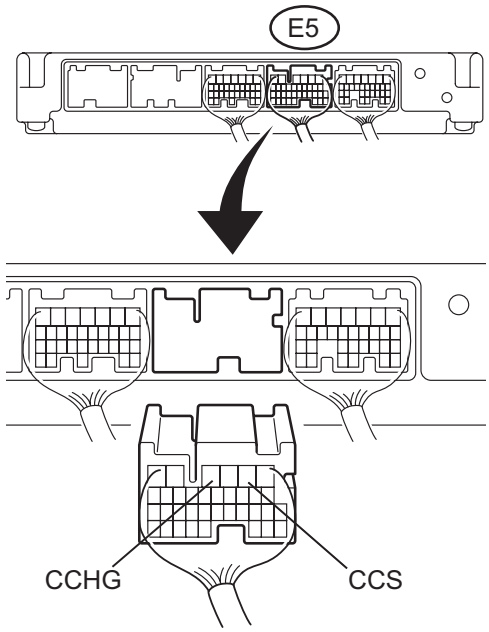

(a) Measure the resistance according to the value(s) in the table below.

Standard resistance

Tester Connection	Condition	Specified Condition
C13-5 (CCS) - E5-2 (CCS)	Always	Below 1 Ω
C13-3 (R/N) - E5-4 (CCHG)	Always	Below 1 Ω
C13-5 (CCS) - Body ground	Always	10 kΩ or higher
C13-3 (R/N) - Body ground	Always	10 kΩ or higher
C13-4 (ECC) - Body ground	Always	Below 1 Ω

NG → **REPAIR OR REPLACE HARNESS OR CONNECTOR**

OK

REPLACE ECM (See page ES-498)

CC