LASER SENSOR

COMPONENTS

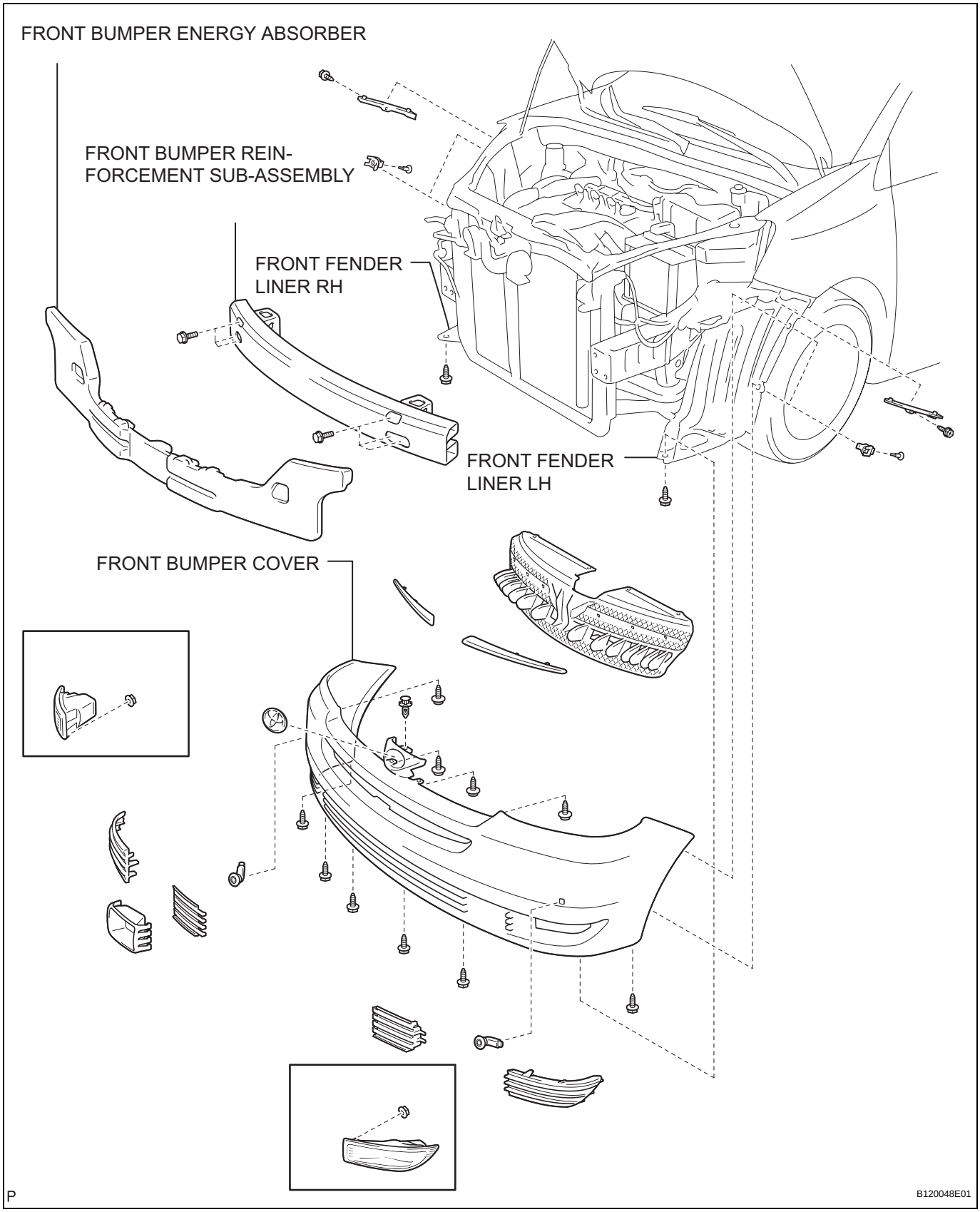

REMOVAL

1. **REMOVE FRONT FENDER LINER LH**
2. **REMOVE FRONT FENDER LINER RH**
3. **REMOVE FRONT BUMPER COVER (See page ET-3)**
4. **REMOVE FRONT BUMPER ENERGY ABSORBER**
5. **REMOVE FRONT BUMPER REINFORCEMENT SUB-ASSEMBLY**
6. **REMOVE LASER SENSOR**
   (a) Disconnect the connector and remove the laser the sensor.

