DIAGNOSTIC TROUBLE CODE CHART

1. DTC CHECK

If a malfunction code is displayed during the DTC check , check the suspected area listed for that code in the table below, and proceed to the appropriate page.

DIAGNOSTIC TROUBLE CODE CHART

DTC No.	Detection Item	Suspect Area	See page
B1244	Light Sensor Circuit Malfunction	1. Automatic light control sensor 2. Harness or connector 3. Multiplex network body ECU	LI-16

DTC	B1244	Light Sensor Circuit Malfunction

DESCRIPTION

This DTC is output when failure in the light sensor circuit is detected.

DTC No.	DTC Detection Condition	Trouble Area
B1244	• Malfunction of automatic light control sensor • Open or short of automatic light control sensor circuit	• Automatic light control sensor • Harness or connector • Multiplex network body ECU

WIRING DIAGRAM

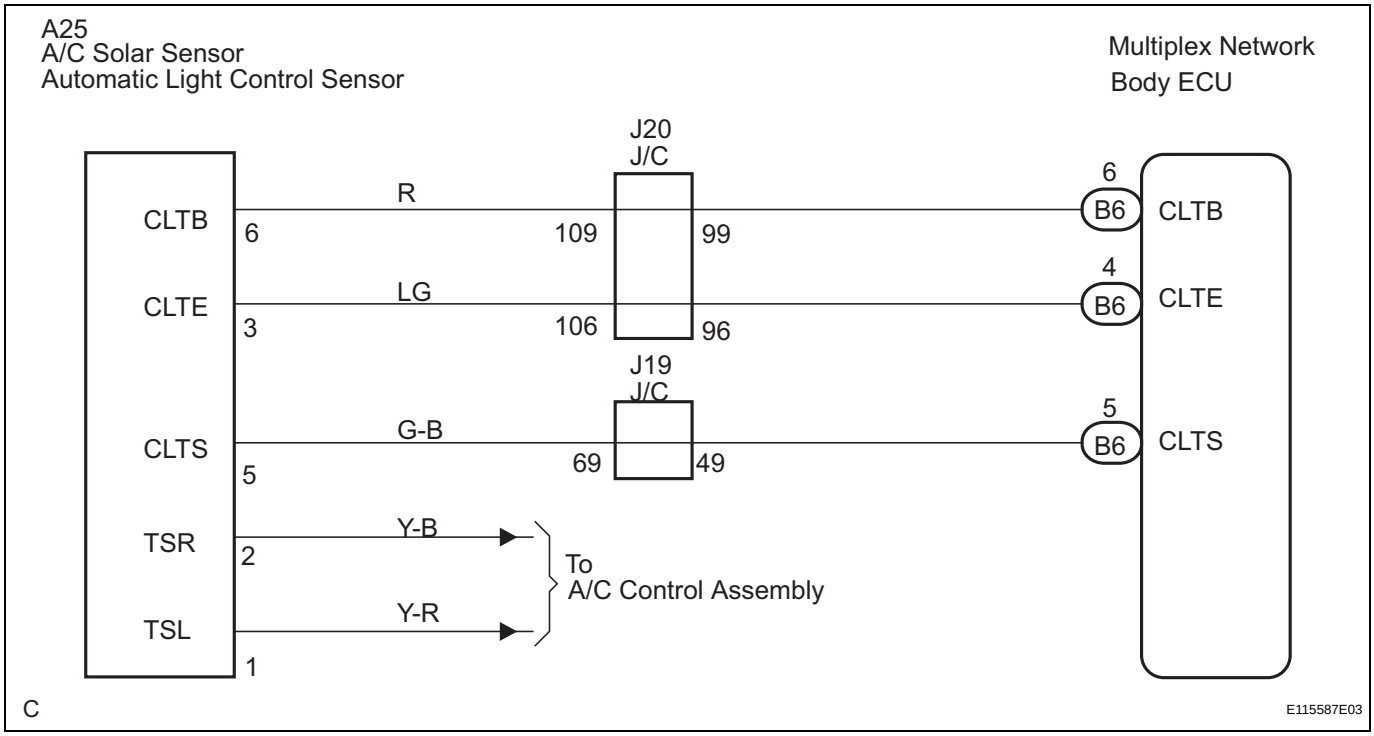

INSPECTION PROCEDURE

1	READ VALUE OF INTELLIGENT TESTER

(a) Connect the intelligent tester to DLC3.
(b) Turn the ignition switch ON and push the intelligent tester main switch ON.
(c) Select the items below in the DATA LIST, and read the displays on the intelligent tester.

BODY NO.1:

Item	Measurement Item / Display (Range)	Normal Condition	Diagnostic Note
LIGHT CTRL TYPE	Light control type / CRNT or OLD	Customized sign can be displayed.	-

OK → **REPLACE INSTRUMENT PANEL JUNCTION BLOCK ASSEMBLY**

NG

2	CHECK HARNESS AND CONNECTOR (MULTIPLEX NETWORK BODY ECU - AUTOMATIC LIGHT CONTROL SENSOR)

(a) Check for open or short circuit in the harness and the connector between the terminal 6 of the automatic light control sensor and the terminal B6-6 of the multiplex network body ECU (See page IN-30).
(b) Check for open or short circuit in the harness and the connector between the terminal 3 of the automatic light control sensor and the terminal B6-4 of the multiplex network body ECU (See page IN-30).
(c) Check for open or short circuit in the harness and the connector between the terminal 5 of the automatic light control sensor and the terminal B6-5 of the multiplex network body ECU (See page IN-30).

NG → REPAIR OR REPLACE HARNESS OR CONNECTOR

LI

OK

3	INSPECT AUTOMATIC LIGHT CONTROL SENSOR

(a) Measure voltage between the terminal 3 and the terminal 5 of the automatic light control sensor.

Standard

Tester connection	Condition	Specified voltage
3 - 5	Ignition switch OFF → ON	Signal wave form

OK → REPLACE INSTRUMENT PANEL JUNCTION BLOCK ASSEMBLY

NG

4	INSPECT INSTRUMENT PANEL JUNCTION BLOCK ASSEMBLY

(a) Measure voltage between the terminal B6-6 and the terminal B6-4 of the multiplex network body ECU in the instrument panel junction block assembly.

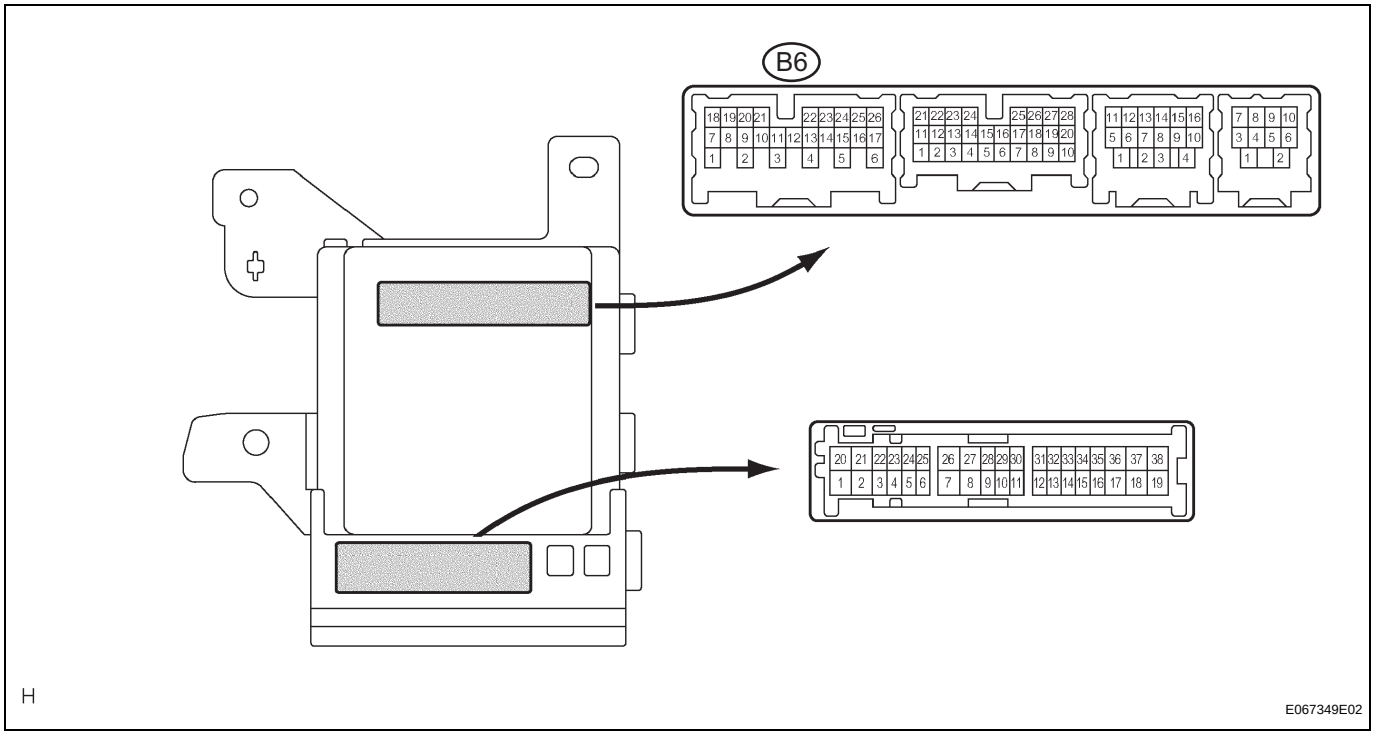

LI

Voltage

Tester connection	Condition	Specified voltage
B6-4 - B6-6	Ignition switch OFF → ON	10 to 14 V

NG → **REPLACE INSTRUMENT PANEL JUNCTION BLOCK ASSEMBLY**

OK

REPLACE AUTOMATIC LIGHT CONTROL SENSOR