Automatic Light Control Sensor Circuit

DESCRIPTION

The Multiplex network body ECU receives the signal from the automatic light control sensor.
HINT:
DTC code is output when malfunction of automatic light control sensor or open or short of automatic light control sensor circuit occurs.

WIRING DIAGRAM

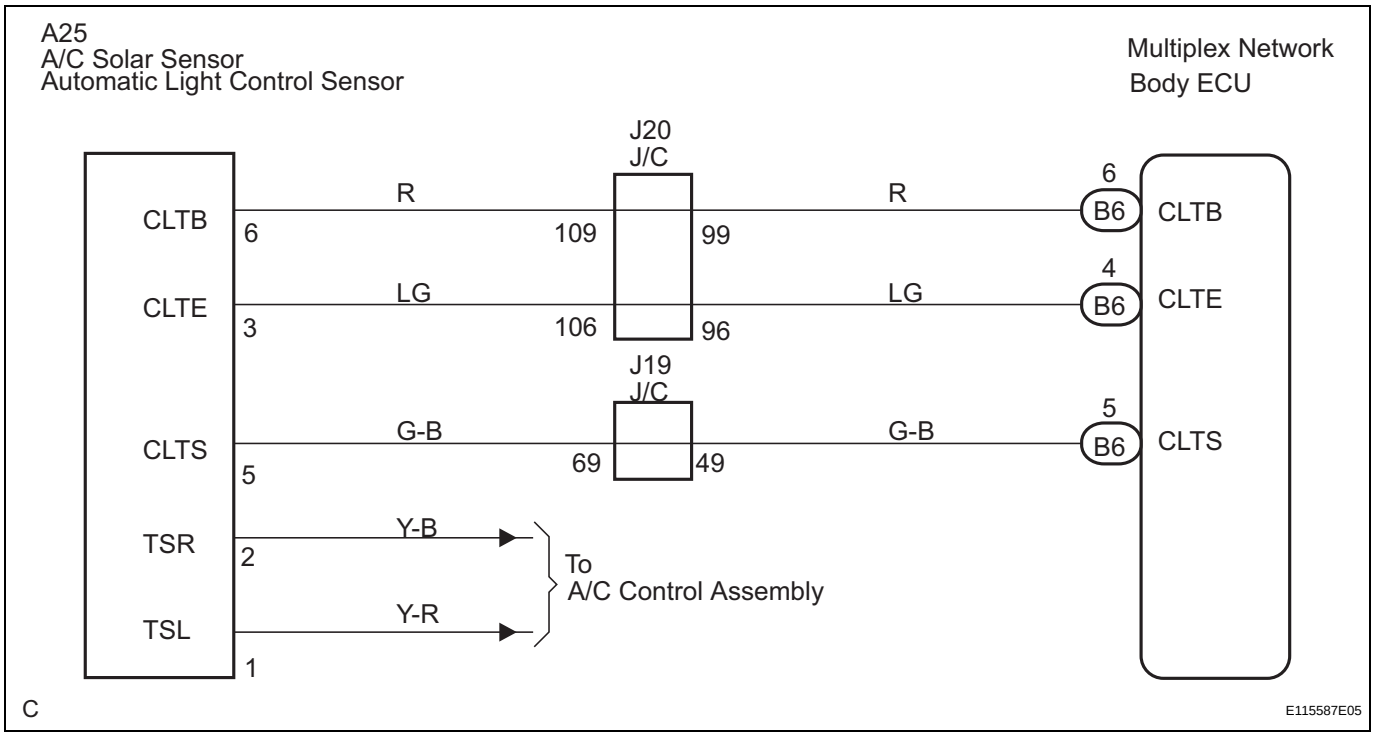

INSPECTION PROCEDURE

1	READ VALUE OF INTELLIGENT TESTER

(a) Connect the intelligent tester to DLC3.
(b) Turn the ignition switch ON and push the intelligent tester main switch ON.
(c) Select the items below in the DATA LIST, and read the displays on the intelligent tester.

BODY NO.1:

Item	Measurement Item / Display (Range)	Normal Condition	Diagnostic Note
LIGHT CTRL TYPE	Light control type / CRNT or OLD	Customized sign can be displayed.	-

OK → **PROCEED TO NEXT CIRCUIT INSPECTION SHOWN IN PROBLEM SYMPTOMS TABLE**

NG

2	CHECK HARNESS AND CONNECTOR (MULTIPLEX NETWORK BODY ECU - AUTOMATIC LIGHT CONTROL SENSOR)

(a) Check for open or short circuit in the harness and the connector between the terminal 6 of the automatic light control sensor and the terminal B6-6 of the multiplex network body ECU (See page IN-30).

(b) Check for open or short circuit in the harness and the connector between the terminal 3 of the automatic light control sensor and the terminal B6-4 of the multiplex network body ECU (See page IN-30).

(c) Check for open or short circuit in the harness and the connector between the terminal 5 of the automatic light control sensor and the terminal B6-5 of the multiplex network body ECU (See page IN-30).

NG → **REPAIR OR REPLACE HARNESS OR CONNECTOR**

OK

3	INSPECT INSTRUMENT PANEL JUNCTION BLOCK ASSEMBLY

(a) Measure voltage between the terminal B6-4 and the terminal B6-6 of the multiplex network body ECU in the instrument panel junction block assembly.

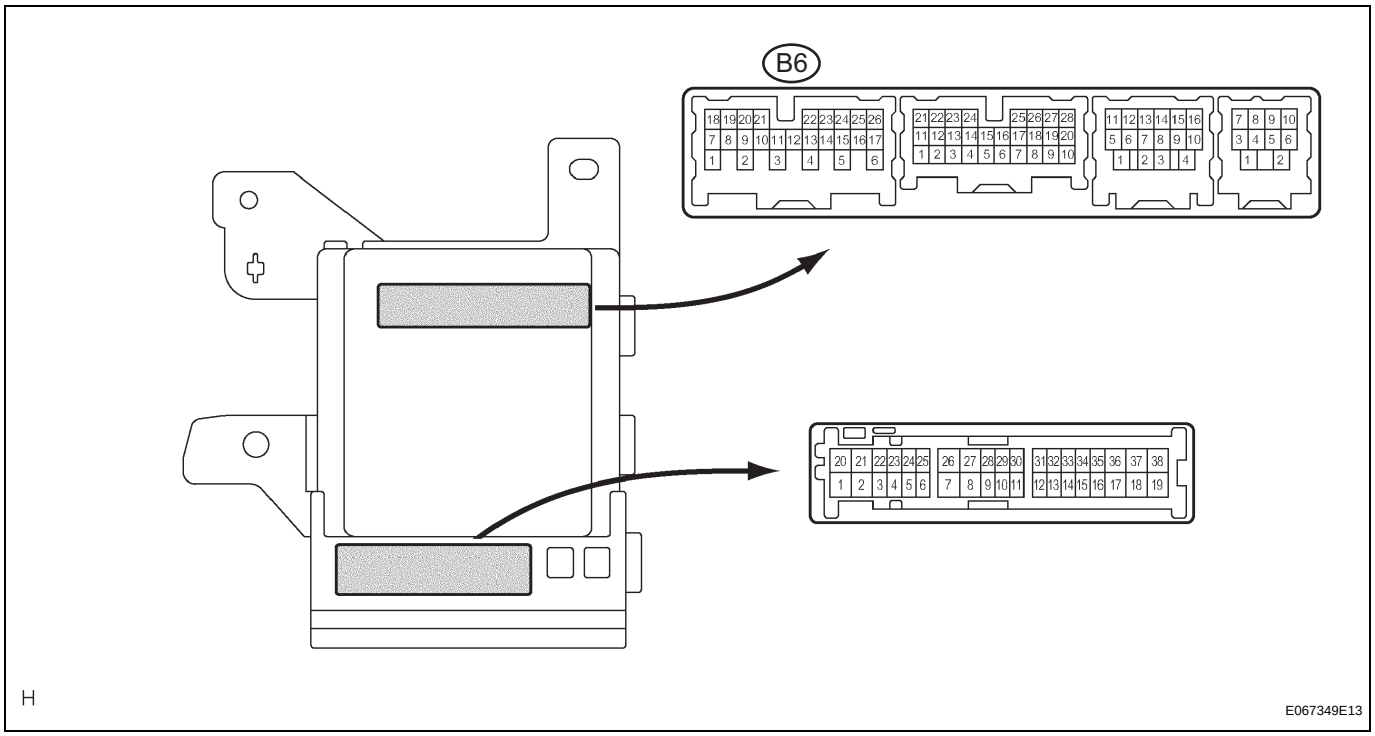

Voltage

Tester Connection	Condition	Specified Condition
B6-4 - B6-6	Ignition switch OFF → ON	10 to 14 V

NG → **REPLACE AUTOMATIC LIGHT CONTROL SENSOR**

OK

PROCEED TO NEXT CIRCUIT INSPECTION SHOWN IN PROBLEM SYMPTOMS TABLE