Door Courtesy Switch Circuit

DESCRIPTION

The Multiplex network body ECU detects the condition of the door courtesy switch assembly.

WIRING DIAGRAM

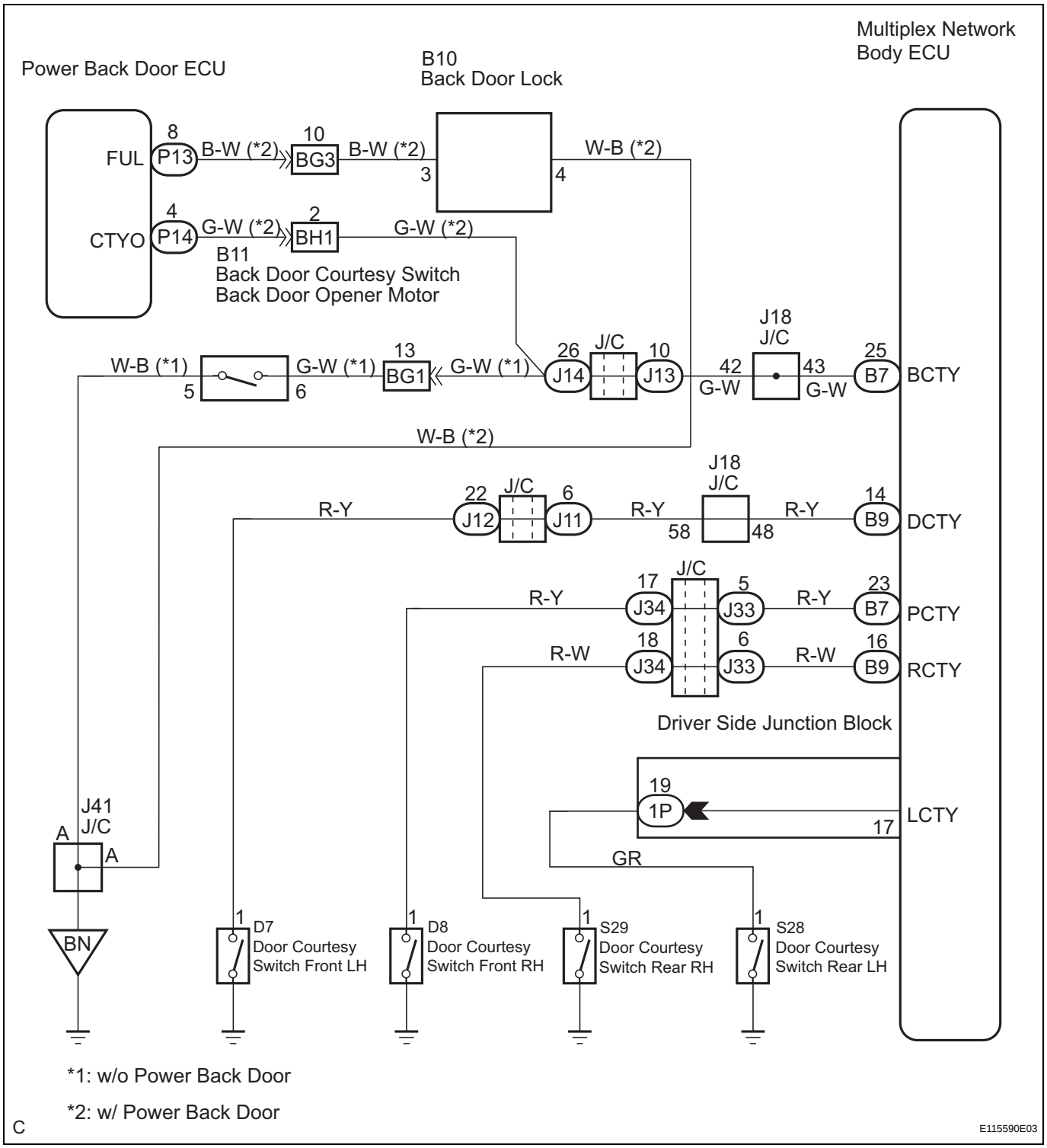

INSPECTION PROCEDURE

1	READ VALUE OF INTELLIGENT TESTER

(a) Connect the intelligent tester to DLC3.
(b) Turn the ignition switch to ON and push the intelligent tester main switch ON.
(c) Select the items below in the DATA LIST, and read the displays on the intelligent tester.

BODY NO.1:

Item	Measurement Item / Display (Range)	Normal Condition	Diagnostic Note
D DOR CTY SW	Driver's door courtesy SW signal / ON or OFF	ON: Driver's door is open OFF: Driver's door is closed	-
P DOR CYT SW	Passenger's door courtesy SW signal / ON or OFF	ON: Front passenger's door is open OFF: Front passenger's door is closed	-
Rr DOR CTY SW	Rear slide door courtesy SW signal / ON or OFF	ON: Either right or left rear slide door is open OFF: Both the right and left slide doors are closed	-

BACK DOOR:

Item	Measurement Item / Display (Range)	Normal Condition	Diagnostic Note
COURTESY SW	Back door courtesy SW signal / ON or OFF	ON: Back door is open OFF: Back door is closed	-

OK → **PROCEED TO NEXT CIRCUIT INSPECTION SHOWN IN PROBLEM SYMPTOMS TABLE**

NG

2	INSPECT COURTESY LIGHT SWITCH

(a) Inspect each of the courtesy light switch continuity (See page LI-108 for Front, LI-109 for Rear).

NG → **REPLACE COURTESY LIGHT SWITCH**

OK

3	INSPECT BACK DOOR LOCK ASSEMBLY

(a) Inspect the courtesy light switch terminal of the back door lock assembly (See page LI-110).

NG → **REPLACE BACK DOOR LOCK ASSEMBLY**

OK

4	CHECK HARNESS AND CONNECTOR

(a) Disconnect the 1P, B7 and B9 connector from the instrument panel junction block assembly.

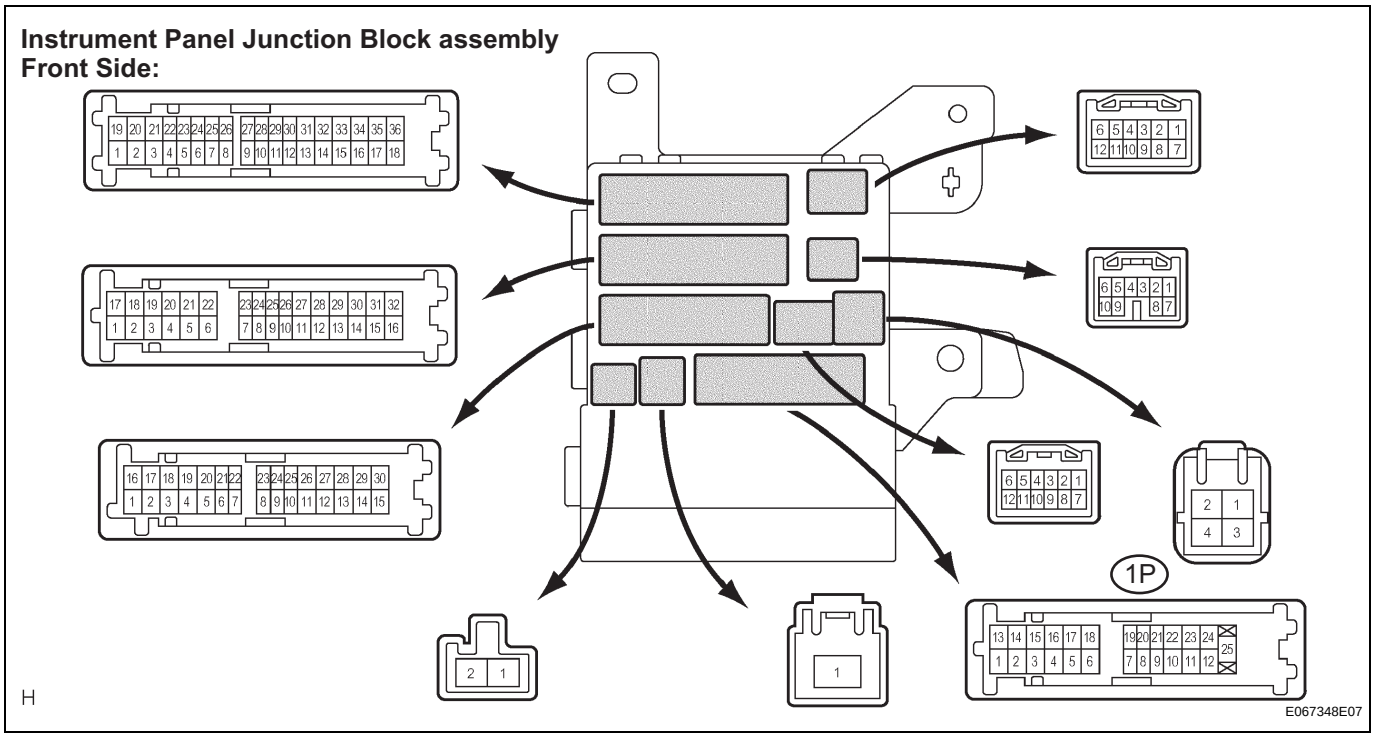

(b) Check the resistance between each of the terminals of instrument panel junction block assembly connector side and body ground as shown in the chart below.

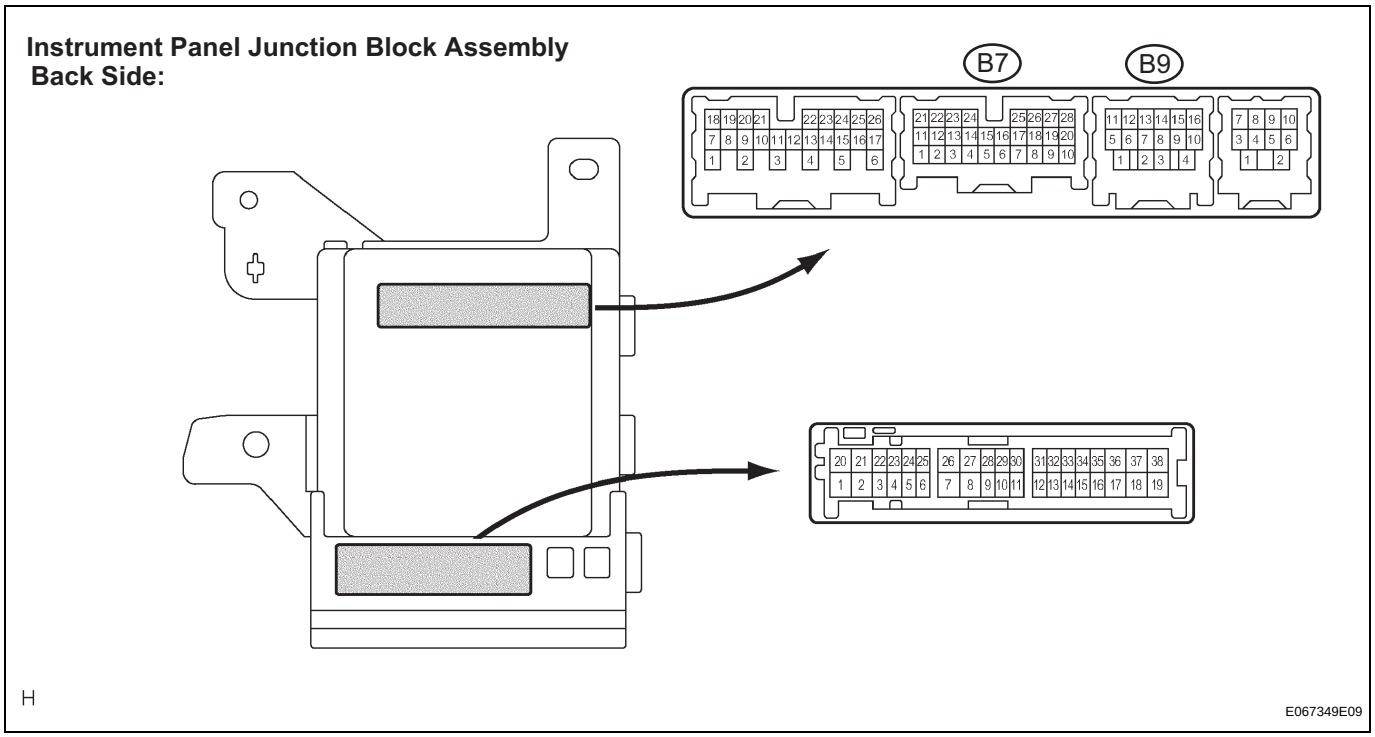

Resistance

Inspect area	Tester Connection	Specified Condition
Front driver door open → close)	B9-14 - Body ground	Below 1 Ω → 10 kΩ or higher
Front passenger door open → close	B7-23 - Body ground	Below 1 Ω → 10 kΩ or higher
Rear RH slide door open → close	B9-16 - Body ground	Below 1 Ω → 10 kΩ or higher
Rear LH slide door open → close	1P-19 - Body ground	Below 1 Ω → 10 kΩ or higher

NG → **REPAIR OR REPLACE HARNESS OR CONNECTOR**

OK

5	INSPECT INSTRUMENT PANEL JUNCTION BLOCK ASSEMBLY (BACK DOOR COURTESY LIGHT SWITCH CIRCUIT)

(a) Measure voltage between the terminal B7-25 of the multiplex network body ECU and body ground.

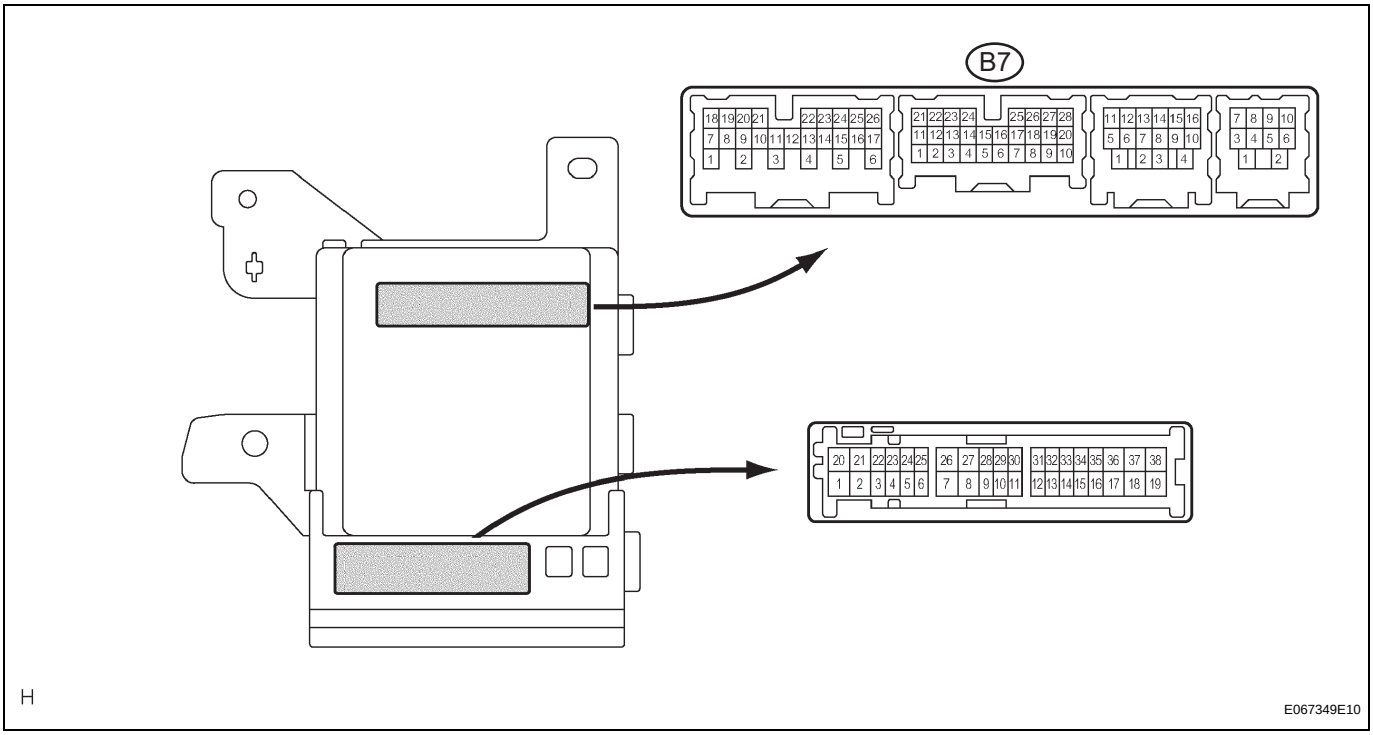

Voltage

Tester Connection	Condition	Specified Condition
B7-25 - Body ground	Back door is open	Below 1 V
B7-25 - Body ground	Back door is closed	10 to 14 V

OK → **PROCEED TO NEXT CIRCUIT INSPECTION SHOWN IN PROBLEM SYMPTOMS TABLE**

NG

6	CONFIRM VEHICLE TYPE

(a) Check the vehicle models.

A: w/o Power back door
B: w/ Power back door

A → REPAIR OR REPLACE HARNESS OR CONNECTOR

B →

7	INSPECT POWER BACK DOOR SYSTEM

(a) Inspect the power back door circuit (See page ED-124).

NG → CHECK AND REPLACE POWER BACK DOOR SYSTEM

OK →

REPAIR OR REPLACE HARNESS OR CONNECTOR