Illumination Circuit

DESCRIPTION

The Multiplex network body ECU controls illumination light as shown in the chart below.

1. Room light assembly (Interior light, luggage component light) and courtesy light with DOOR position
2. Map light assembly (Personal light)
3. Transponder key amplifier (Ignition key cylinder light)

WIRING DIAGRAM

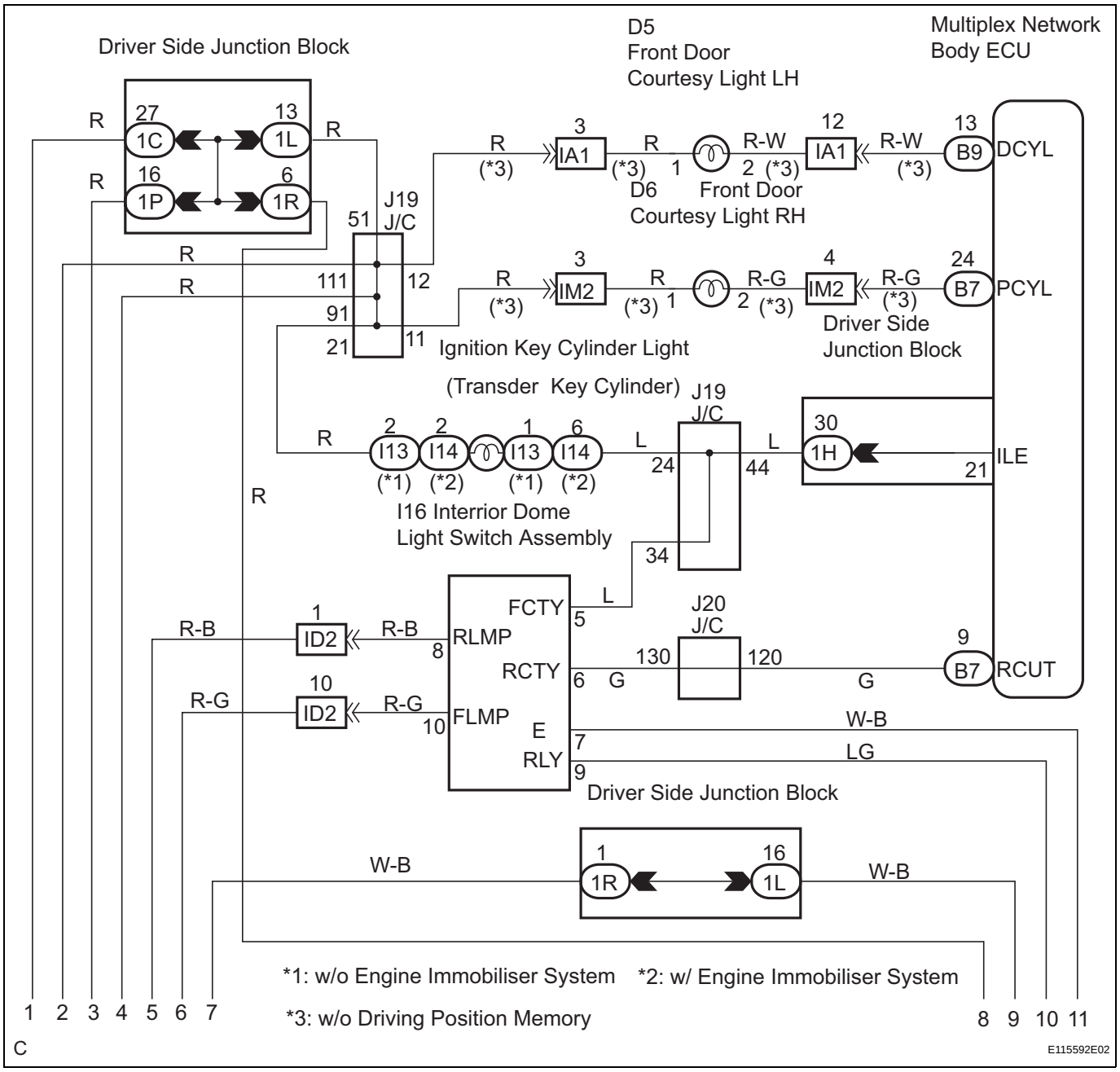

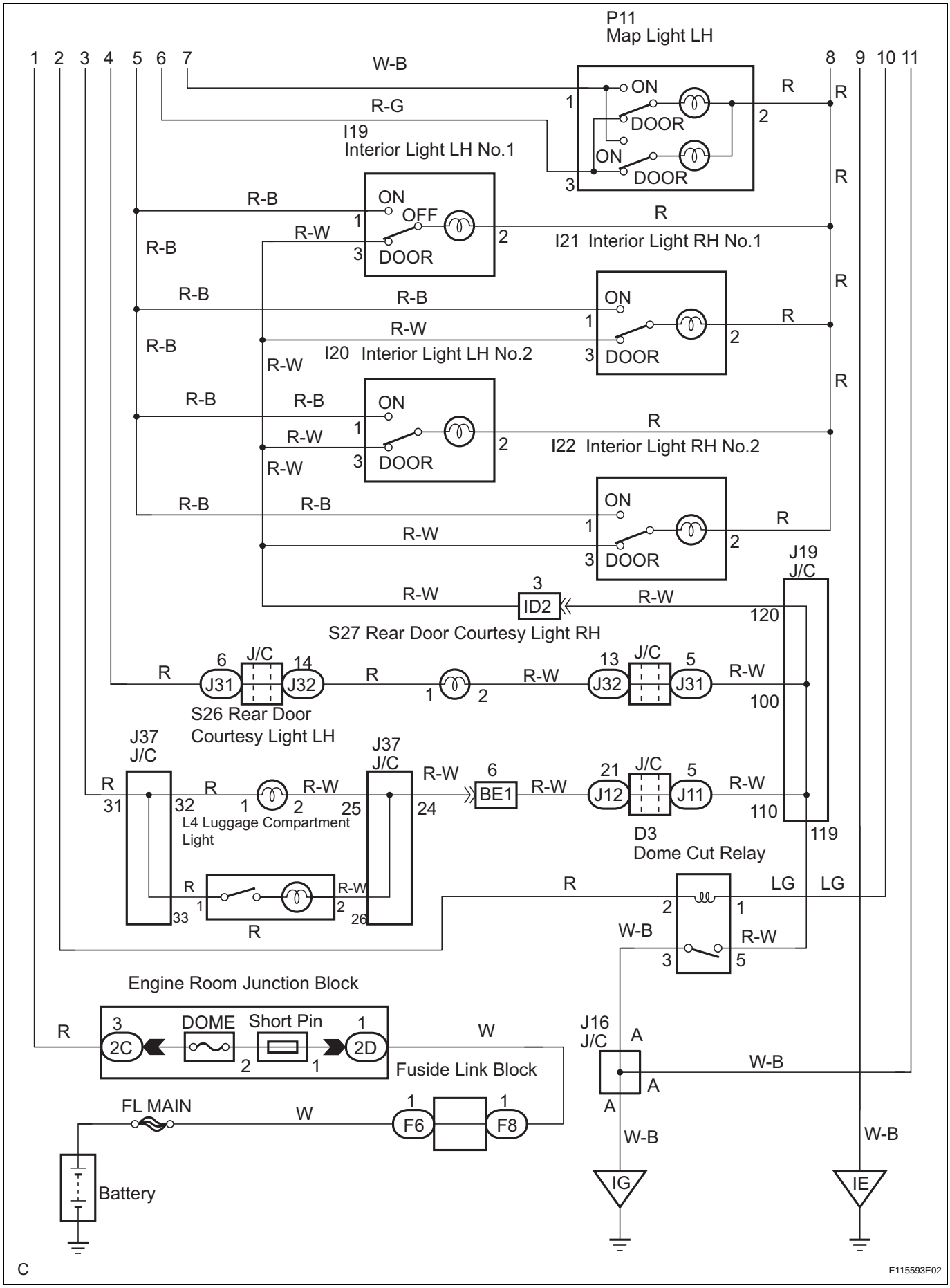
P11
Map Light LH
1 2 3 4 5 6 7
8 9 10 11
W-B
R-G
ON
DOOR
I19
Interior Light LH No.1
R-B
R-W
OFF
I21 Interior Light RH No.1
I20 Interior Light LH No.2
I22 Interior Light RH No.2
R
J19
J/C
ID2
S27 Rear Door Courtesy Light RH
J31
J32
J/C
S26 Rear Door
Courtesy Light LH
J37
J/C
L4 Luggage Compartment
Light
BE1
J12
J11
D3
Dome Cut Relay
LG
W-B
Engine Room Junction Block
DOME
Short Pin
2C
2D
Fuside Link Block
J16
J/C
FL MAIN
F6
F8
Battery
IG
IE
C
E115593E02

INSPECTION PROCEDURE

1 PERFORM ACTIVE TEST BY INTELLIGENT TESTER

(a) Connect the intelligent tester to DLC3.
(b) Turn the ignition switch ON and push the intelligent tester main switch ON.
(c) Select the item below in the ACTIVE TEST and then check that the relay operates.

DATA LIST / AIR CONDITIONER:

Item	Test Details	Diagnostic Note
ILLUMI OUTPUT	(Test Details) Turn Interior light and Key illumination ON / OFF (Vehicle Condition) Interior light SW is in Door position and all doors are closed	-

NG → **PROCEED TO NEXT CIRCUIT INSPECTION SHOWN IN PROBLEM SYMPTOMS TABLE**

OK

2 INSPECT LIGHT CONTROL RELAY

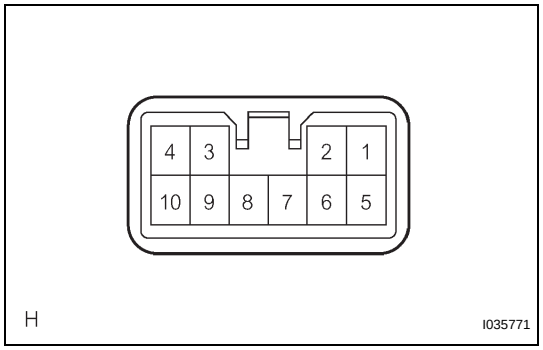

(a) Check that there is resistance between the terminals at each switch position as shown in the chart.
Resistance

Switch operation	Tester connection	Specified Condition
OFF	8 - 7 9 - 7 10 - 7	10 kΩ ro higher
DOOR	5 - 10 6 - 9 7 - 8	Below 1 Ω
ON	7 - 8 - 9 - 10	Below 1 Ω

NG → **REPLACE LIGHT CONTROL RELAY**

OK

3	INSPECT INTERIOR DOME LIGHT SWITCH ASSEMBLY

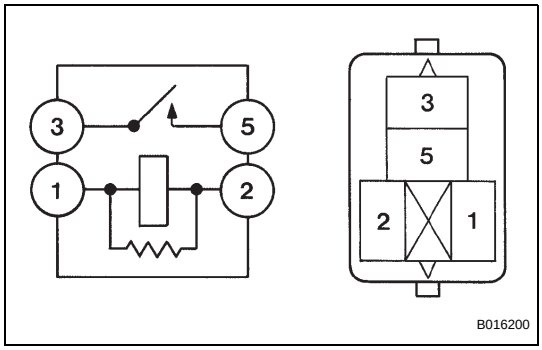

(a) Inspect interior dome light relay continuity.
Resistance

Condition	Tester connection	Specified Condition
Always	3 - 5	10 kΩ ro higher
Apply B+ between the terminal 1 and 2	3 - 5	Below 1 Ω

NG → REPLACE INTERIOR DOME LIGHT SWITCH ASSEMBLY

OK

4	INSPECT INTERIOR LIGHT

LI

(a) Inspect the each of interior light (See page LI-97).

NG → REPLACE INTERIOR LIGHT

OK

5	INSPECT INSTRUMENT PANEL JUNCTION BLOCK ASSEMBLY

(a) Measure voltage between each of the terminals as shown in the chart below.

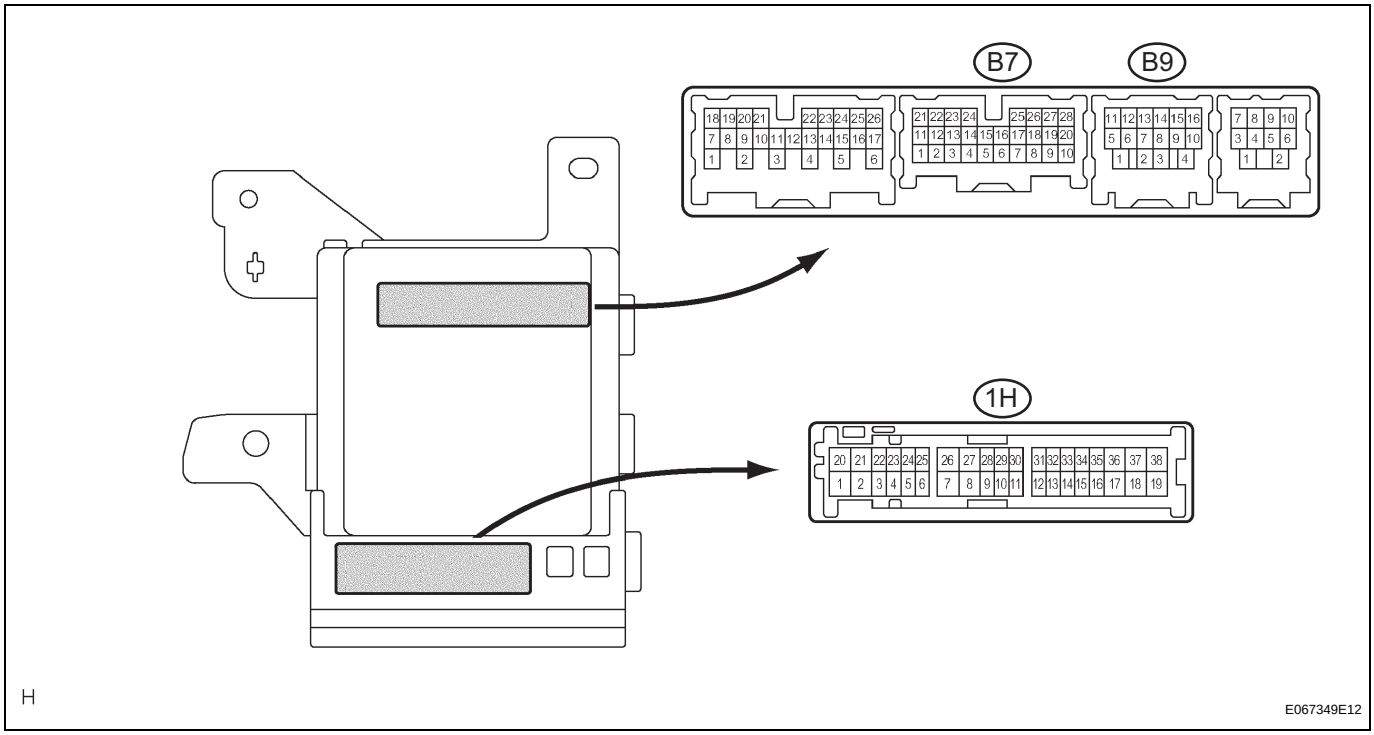

Voltage

Tester connection	Condition	Specified voltage
1H-30 - Body ground	All doors are closed → any door is open	10 to 14 V → Below 1 V

Tester connection	Condition	Specified voltage
B7-9 - Body ground	All doors are closed → open	10 to 14 V → Below 1 V
B9-13 - Body ground	Front driver's door is closed → open	10 to 14 V → Below 1 V
B7-24 - Body ground	Front passenger's door is closed → open	10 to 14 V → Below 1 V

NG → **REPAIR OR REPLACE HARNESS OR CONNECTOR**

OK

PROCEED TO NEXT CIRCUIT INSPECTION SHOWN IN PROBLEM SYMPTOMS TABLE