REMOVAL

1. **DISCONNECT CABLE FROM NEGATIVE BATTERY TERMINAL**
2. **REMOVE FRONT BUMPER ASSEMBLY (See page ET-3)**
3. **REMOVE HEADLIGHT ASSEMBLY**
   (a) Disconnect the connectors.
   (b) Remove the bolt, 3 screws and headlight assembly.

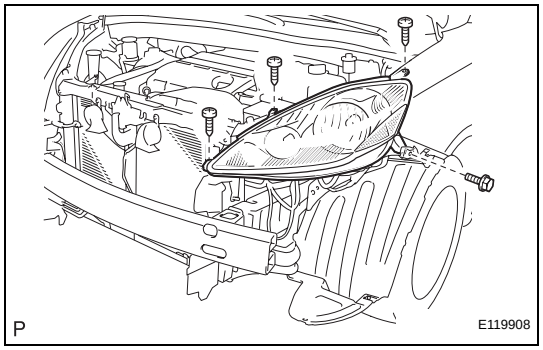

DISASSEMBLY

1. **REMOVE NO. 1 HEADLIGHT BULB (HALOGEN HEADLIGHT)**
   (a) Turn in the direction indicated by the arrow and remove the No. 1 headlight bulb.

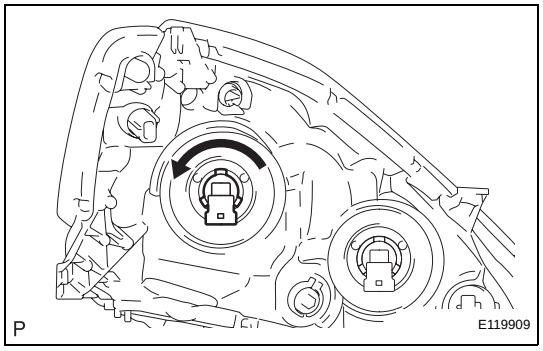

2. **REMOVE DISCHARGE HEADLIGHT BULB (DISCHARGE HEADLIGHT)**
   (a) Turn in the direction indicated by the arrow and remove the headlight socket cover.

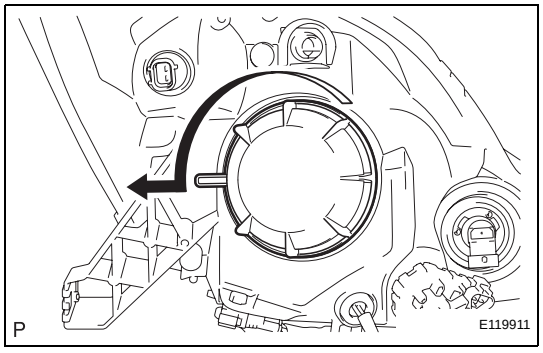

   (b) Turn in the direction indicated by the arrow and disconnect the socket.

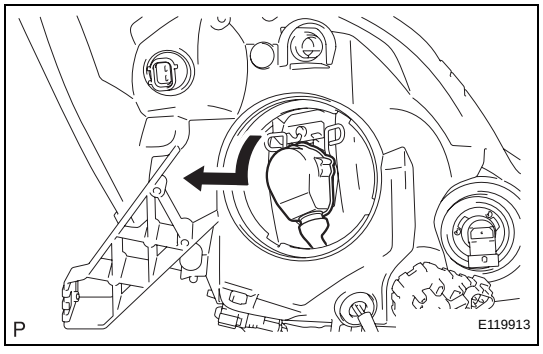

LI

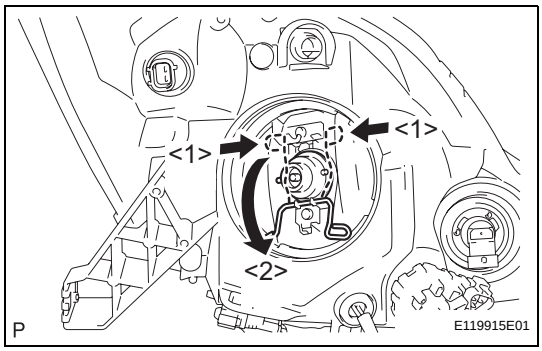

(c) Release the lock of the set spring and remove the discharge headlight bulb as shown in the illustration.

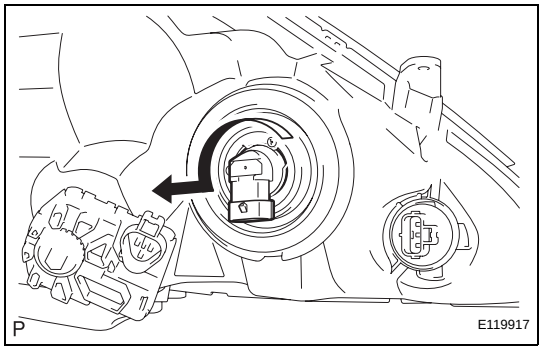

3. REMOVE NO. 2 HEADLIGHT BULB

(a) Turn in the direction indicated by the arrow and remove the No. 2 headlight bulb.

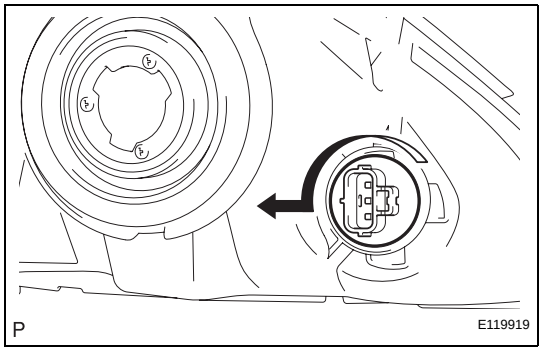

4. REMOVE FRONT TURN SIGNAL LIGHT BULB

(a) Turn in the direction indicated by the arrow and remove the front turn signal light bulb and front turn signal light socket as a unit.

(b) Remove the front turn signal light bulb from the front turn signal light socket.

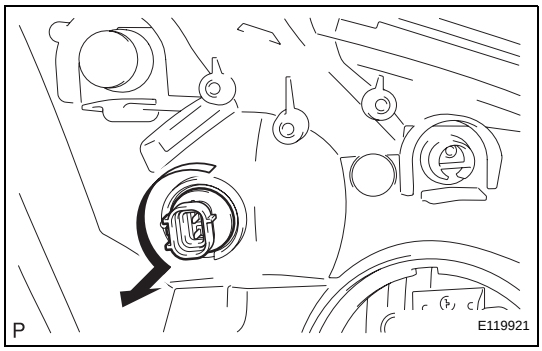

5. REMOVE FRONT SIDE MARKER LIGHT BULB

(a) Turn in the direction indicated by the arrow and remove the side marker light bulb and side marker light socket as a unit.

(b) Remove the side marker light bulb from the side marker light socket.

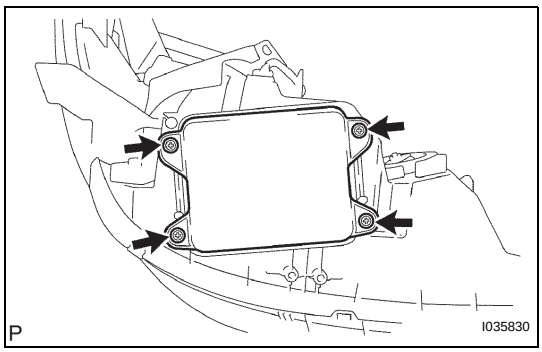

6. REMOVE LIGHT CONTROL ECU (DISCHARGE HEADLIGHT)

(a) Remove the 4 screws and headlight cover.

(b) Remove the headlight gasket.

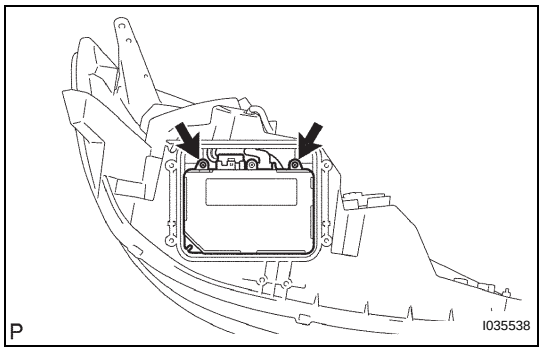

(c) Remove the 2 screws.

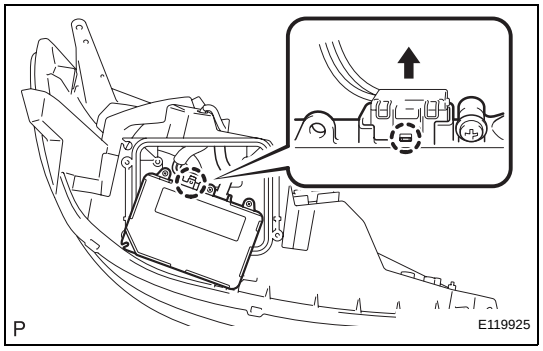

(d) Disengage the claw.
(e) Disconnect the connector and remove the light control ECU.

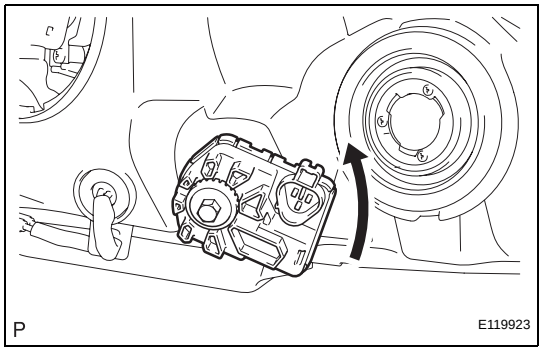

(f) Remove the headlight leveling motor assembly as shown in the illustration.
(g) Remove the headlight leveling motor base packing.