HEADLIGHT ASSEMBLY

COMPONENTS

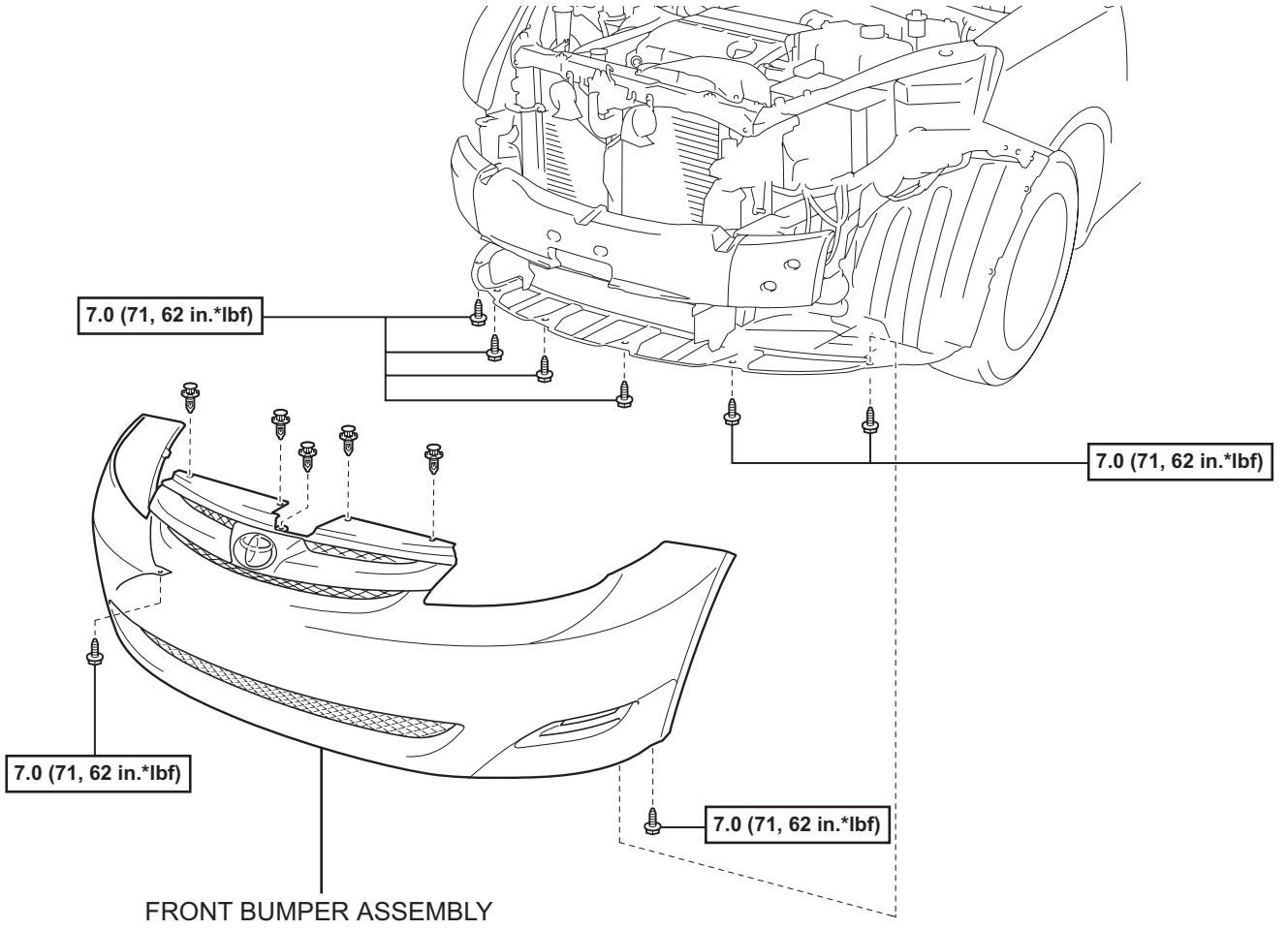

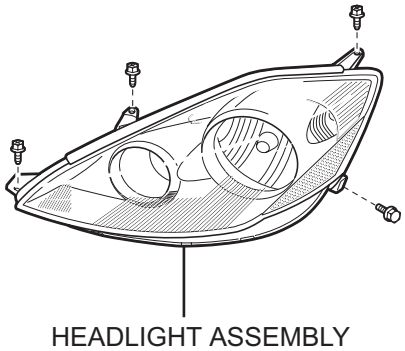

Supply For Low Cost Repair:

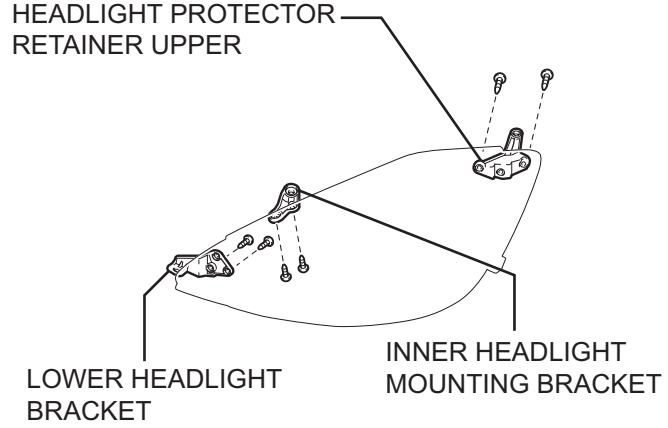

N*m (kgf*cm, ft.*lbf) : Specified torque

P

E119905E01

Halogen Headlight:

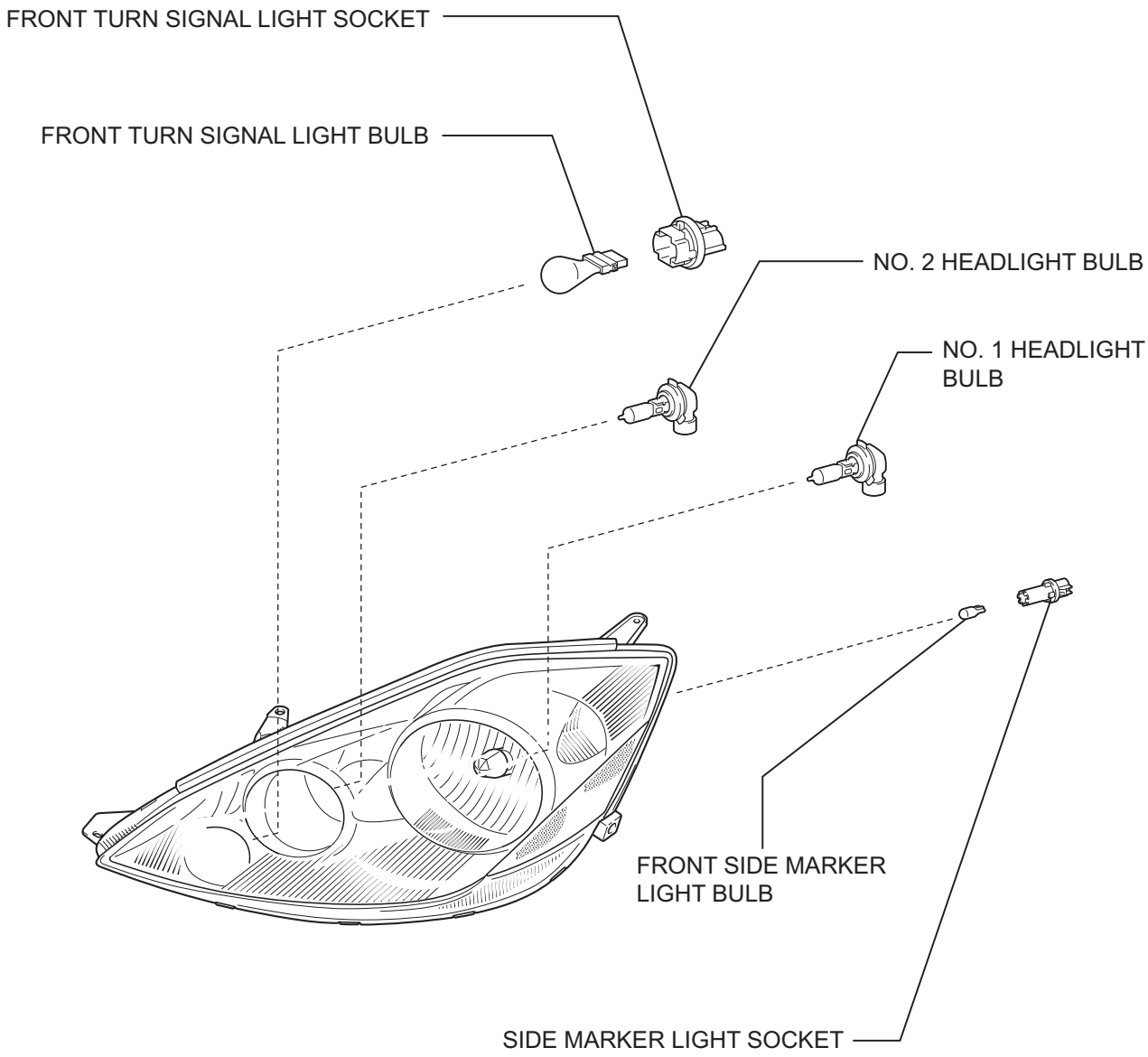

P

E119906E01

Discharge Headlight:

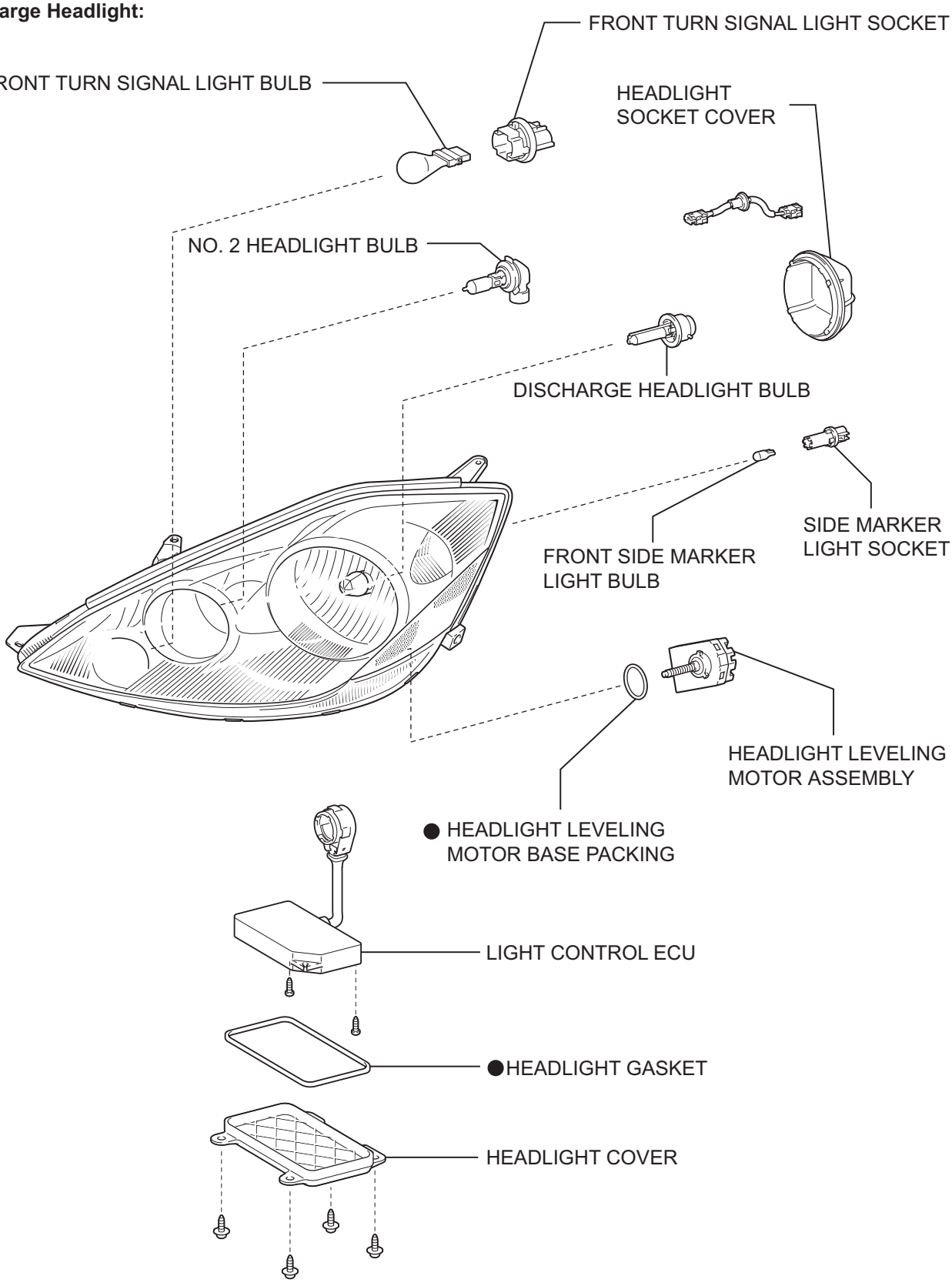

● Non-reusable part

P

E119907E01