REMOVAL

1. **REMOVE BACK DOOR GARNISH CENTER (See page ED-214)**
2. **REMOVE BACK DOOR SIDE GARNISH LH (See page ED-214)**
3. **REMOVE BACK DOOR SIDE GARNISH RH (See page ED-214)**
4. **REMOVE BACK DOOR STRAP COVER SUB-ASSEMBLY**
5. **REMOVE BACK DOOR PULL STRAP (See page ED-214)**
6. **REMOVE BACK DOOR TRIM BOARD ASSEMBLY (See page ED-214)**
7. **REMOVE BACK-UP LIGHT ASSEMBLY**
   (a) Disconnect the connector.
   (b) Release the 2 claw fittings and remove the 4 nuts and the back-up light assembly.

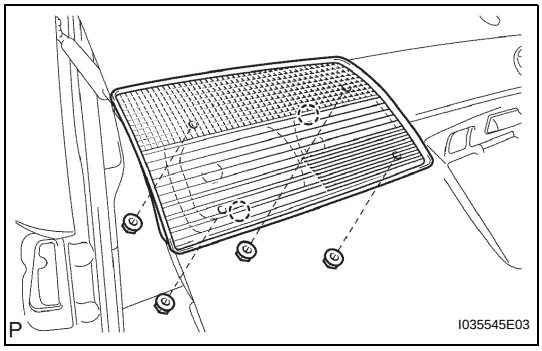

DISASSEMBLY

1. REMOVE BACK-UP LIGHT BULB

(a) Remove the back-up light bulb.

2. REMOVE BACK-UP LIGHT BULB

(a) Remove the back-up light bulb.