HIGH MOUNTED STOP LIGHT ASSEMBLY

COMPONENTS

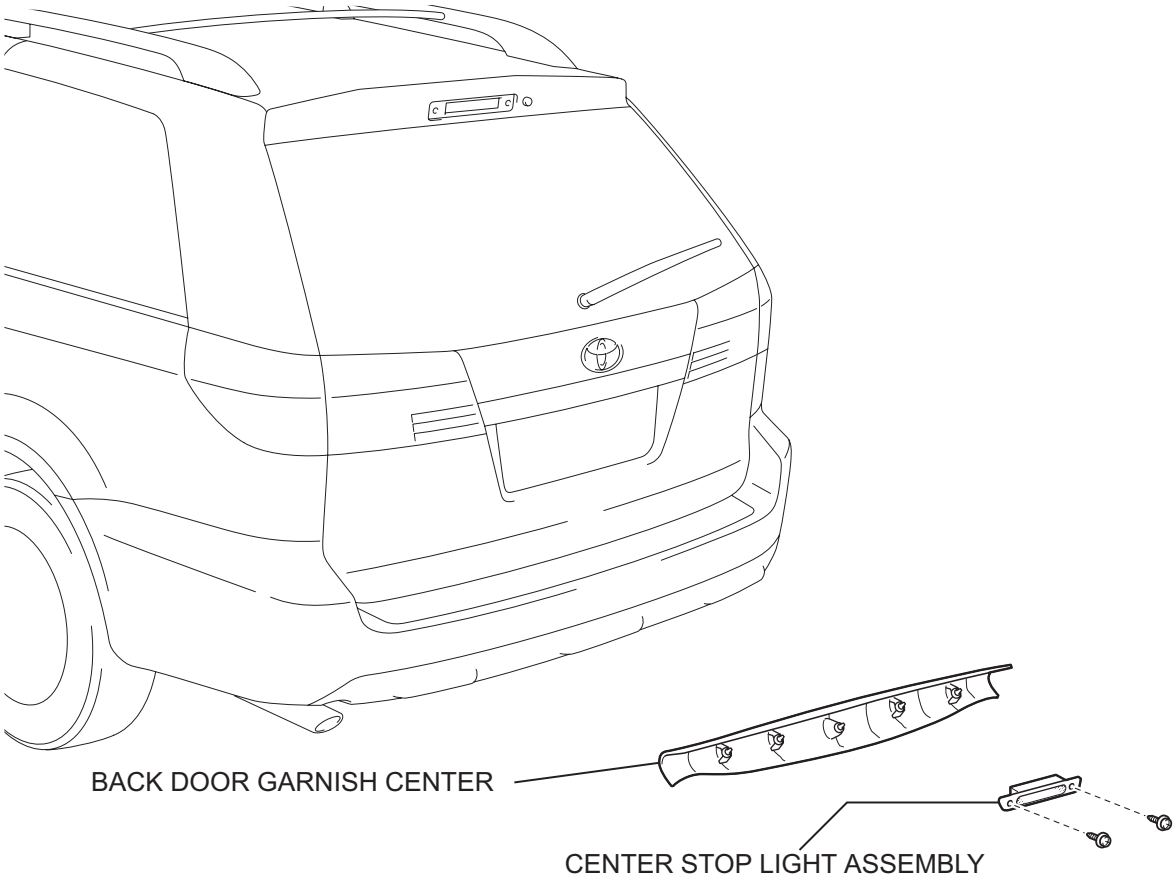

WITH REAR SPOILER:

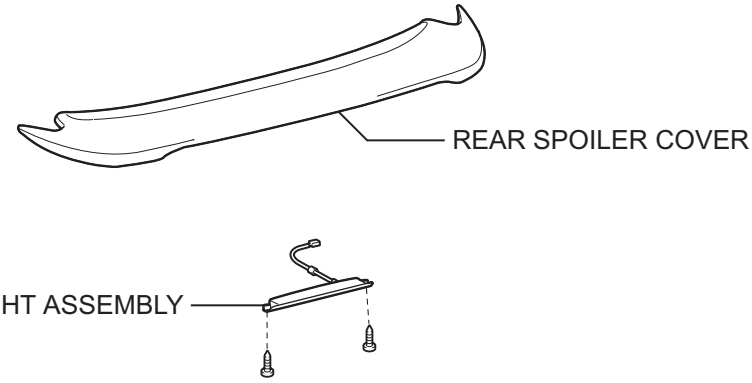

P

E122663E01

REMOVAL

1. **REMOVE BACK DOOR GARNISH CENTER (w/ Rear Spoiler) (See page ED-214)**
2. **REMOVE REAR SPOILER COVER (w/ Rear Spoiler) (See page ET-18)**
3. **REMOVE CENTER STOP LIGHT ASSEMBLY**
   (a) w/o Rear spoiler:
      (1) Disconnect the connector and remove the 2 screws and the center stop light assembly.

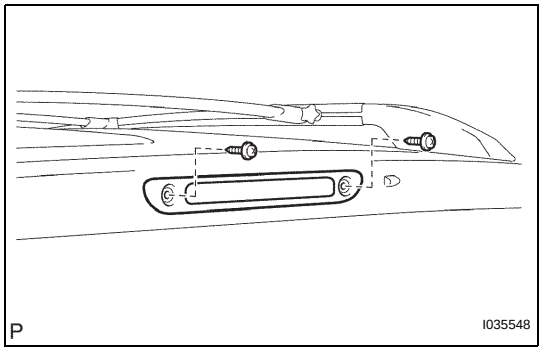

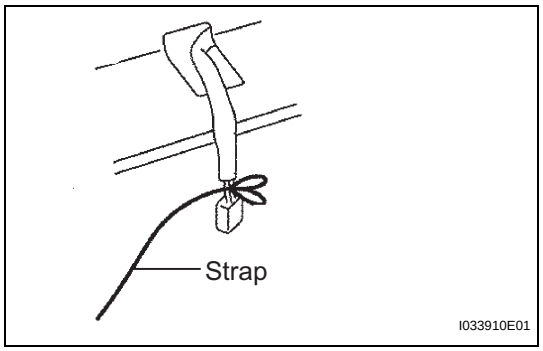

   (b) w/ Rear spoiler:
      (1) Install the strap on the connector of the center stop light assembly.

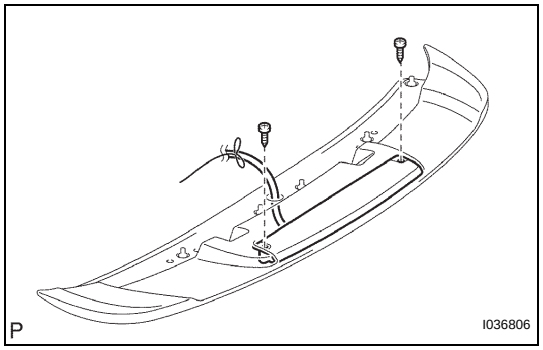

   (c) w/ Rear spoiler:
      (1) Remove the 2 screws.
   (d) w/ Rear spoiler:
      (1) Pass the connector through the inside of the rear spoiler sub-assembly, and remove the center stop light assembly.
      HINT:
      Leave the strap inside the rear spoiler sub-assembly.

LI