REMOVAL

1. **REMOVE REAR WIPER ARM**
   (a) Remove the rear wiper arm head cap from the rear wiper arm.
   (b) Remove the nut and the rear wiper arm.
2. **REMOVE BACK DOOR GARNISH CENTER (See page ED-214)**
3. **REMOVE BACK DOOR SIDE GARNISH LH (See page ED-214)**
4. **REMOVE POWER BACK DOOR ROD**
5. **REMOVE BACK DOOR SIDE GARNISH RH (See page ED-214)**
6. **REMOVE BACK DOOR STRAP COVER (See page ED-214)**
7. **REMOVE BACK DOOR TRIM BOARD ASSEMBLY (See page ED-214)**
8. **REMOVE REAR WIPER MOTOR AND BRACKET ASSEMBLY**
   (a) Remove the 3 bolts.
   (b) Disconnect the connector, and remove the rear wiper motor assembly.

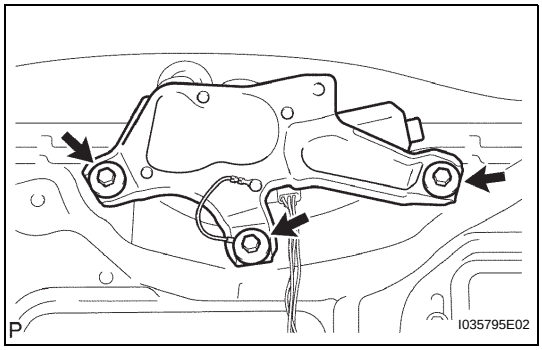

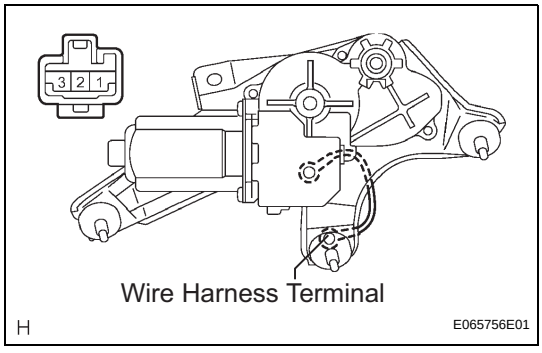

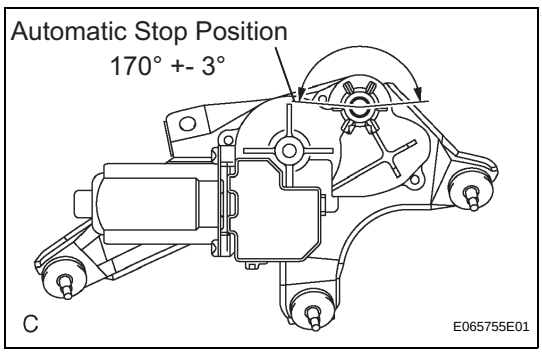

INSPECTION

1. **INSPECT REAR WIPER MOTOR AND BRACKET ASSEMBLY**
   (a) Operation check
      (1) Connect the battery (+) to the terminal 1 (+B) of the connector, the battery (-) to the terminal 3 (LS) of the connector and wire harness terminal of the rear wiper motor and bracket assembly, then check that the rear wiper motor and bracket operate.
   (b) Automatic Stop Position Operation Check
      (1) Connect the battery (+) to the terminal 1 (+B) of the connector, the battery (-) to the terminal 3 (LS) of the connector and wire harness terminal of the rear wiper motor and bracket assembly. With the motor being rotated disconnect the terminal 3 (LS) from the battery (-), then check that the wiper motor stops automatically to the automatic stop position.

INSTALLATION

1. INSTALL REAR WIPER MOTOR AND BRACKET ASSEMBLY

(a) Install the rear wiper motor assembly with the 3 bolts.
Torque: 5.5 N*m (56 kgf*cm, 49 in.*lbf)

(b) Connect the connector.

2. INSTALL REAR WIPER ARM

(a) Scrape off the serration part of the wiper arm with a round file or equivalent.

(b) Clean the rear wiper pivot serration with a brush.

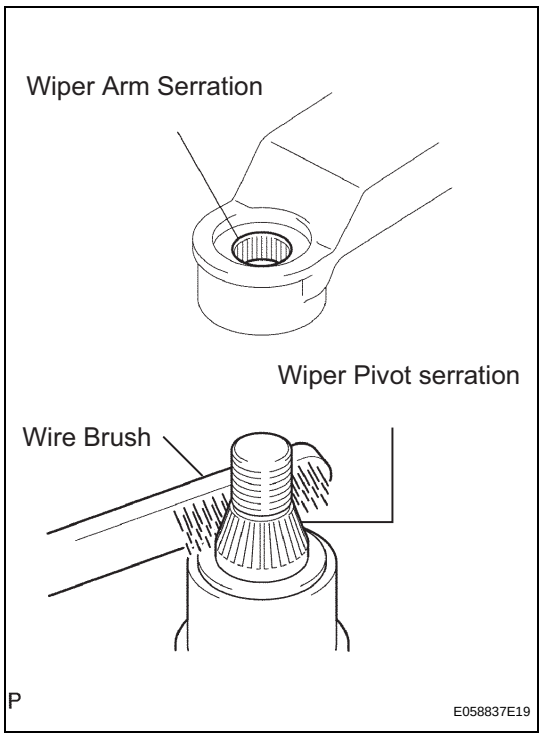

(c) Stop the rear wiper motor assembly to the automatic stop position. Install the rear wiper arm to the position as shown in the illustration.
Torque: 5.5 N*m (56 kgf*cm, 49 in.*lbf)

(d) Install the rear wiper arm head cap.

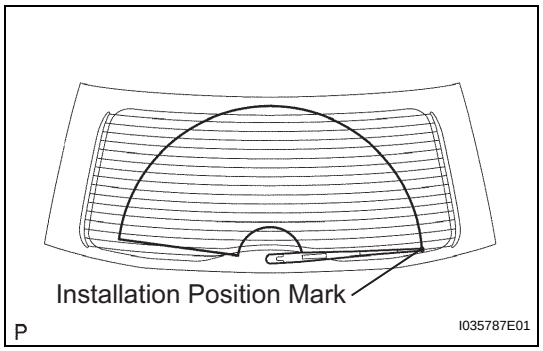

WW