No Answer-Back (Hazard Warning Light and Wireless Door Lock Buzzer)

DESCRIPTION

If there is no answer-back of the hazard light signal and the wireless door lock buzzer although the wireless control function is operating normally, there might be a malfunction in the hazard light signal and the wireless door lock buzzer signal which are output from the multiplex network body ECU.

NOTICE:

Troubleshooting should be started after confirming that the answer-back function has been switched ON through customization.

WIRING DIAGRAM

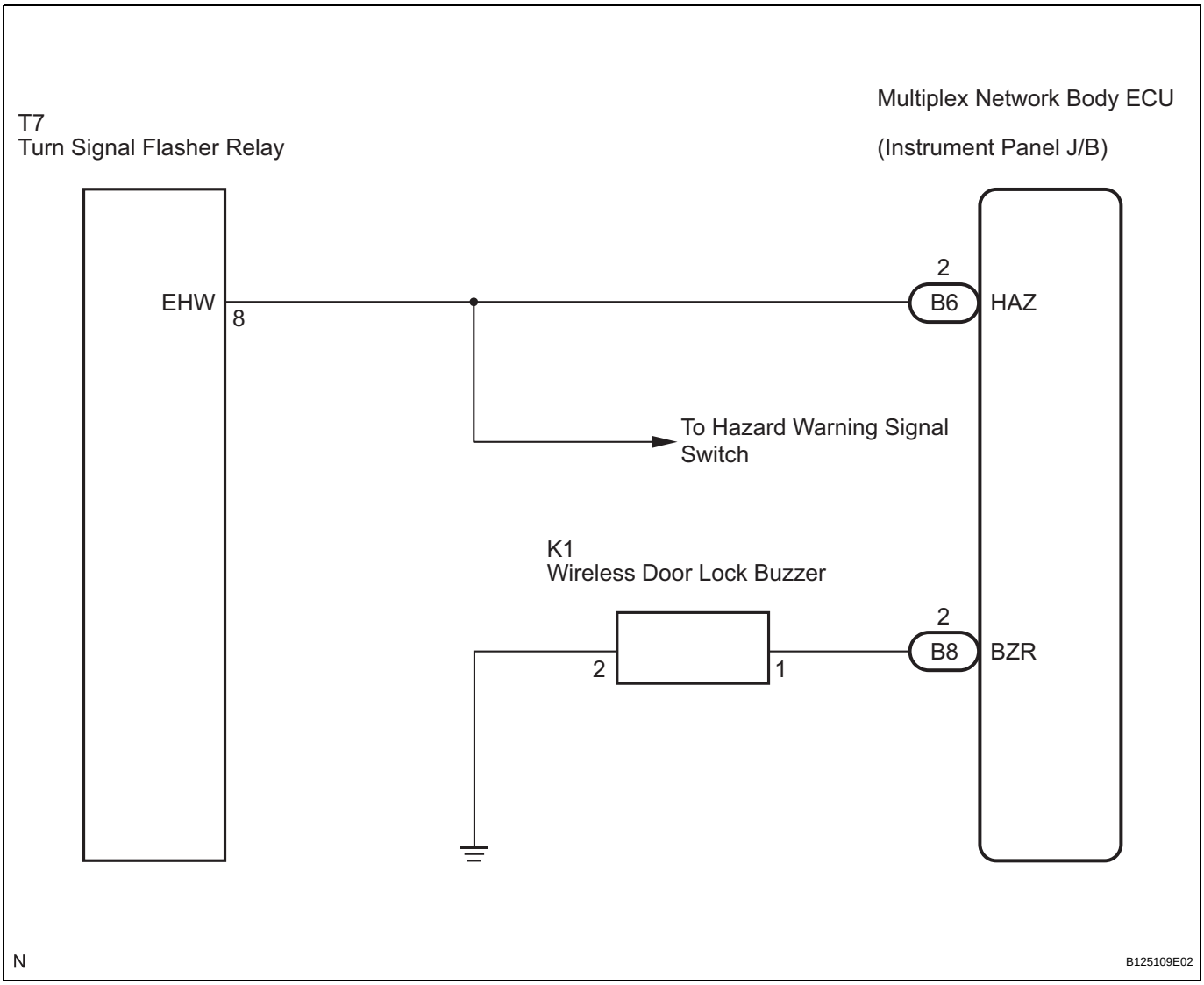

INSPECTION PROCEDURE

When using intelligent tester:

1	CHECK WIRELESS DOOR LOCK CONTROL SYSTEM

(a) Check whether the wireless door lock functions by operating the transmitter switch (See page DL-46).
HINT:
When the wireless door LOCK/UNLOCK operation can be performed, it means that the wireless signal from the transmitter is properly input to the multiplex network body ECU.

Result

Result	Proceed to
Answer-back functions do not operate	A
Wireless door lock function do not operate	Go to "Only Wireless Door Lock Control Function Does Not Operate" (See page DL-69)

A

2	PERFORM ACTIVE TEST BY INTELLIGENT TESTER

(a) Connect the intelligent tester to the DLC3.
(b) Turn the ignition switch ON and push the intelligent tester main switch ON.
(c) Select the item "HAZARD" in the ACTIVE TEST and check the turn signal flasher relay ON/OFF.
(d) Select the item "BUZZ RESP SOUND" in the ACTIVE TEST and check the wireless buzzer ON/OFF.

DL

BODY:

Tester Display	Test Part	Control Range	Diagnostic Note
HAZARD	Turn signal flasher relay	ON / OFF	Observe headlight and rear combination light for correct operation
BUZZ RESP SOUND	Wireless door lock buzzer	ON / OFF	Buzzer can be heard

Result

Result	Proceed to
Wireless door lock buzzer does not sound correctly	A
Hazard warning lights do not flash correctly	B
Wireless door lock buzzer and hazard warning lights work correctly	C

A → **Go to step 4**

C → **REPLACE MULTIPLEX NETWORK BODY ECU**

B

3	CHECK HAZARD WARNING LIGHTS

(a) Check that the hazard warning lights blink when the hazard warning signal switch is pressed.

NG → GO TO LIGHTING SYSTEM

OK

REPLACE MULTIPLEX NETWORK BODY ECU

4 INSPECT WIRELESS DOOR LOCK BUZZER

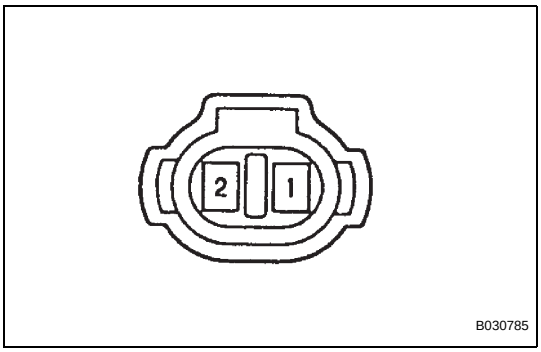

(a) Check the buzzer resistance.
NOTICE:
- **The buzzer circuit is built into the ECU, not into the buzzer itself.**
- **When battery voltage is directly applied to the buzzer, the buzzer does not sound.**

(1) Check the resistance between terminals of the buzzer.
Standard

Terminal No.	Specified Condition
1 - 2	Approx. 1kΩ

NG → REPLACE WIRELESS DOOR LOCK BUZZER

OK

5 CHECK HARNESS AND CONNECTOR (WIRELESS DOOR LOCK BUZZER - MULTIPLEX NETWORK BODY ECU)

Wire Harness Side

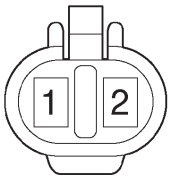

K1
Wireless Door Lock Buzzer

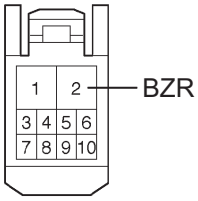

B8
Multiplex Network Body ECU

Y B068692E01

(a) Disconnect the K1 buzzer connector and B8 ECU connector.
(b) Measure the resistance according to the value(s) in the table below.
Standard resistance

Terminal No.	Specified Condition
K1-1 - BZR (B8-2)	Below 1 Ω
BZR (B8-2) - Body ground	10 kΩ or higher
K1-2 - Body ground	Below 1 Ω

NG → REPAIR OR REPLACE HARNESS OR CONNECTOR

OK

REPLACE MULTIPLEX NETWORK BODY ECU

When not using intelligent tester:

1 CHECK WIRELESS DOOR LOCK CONTROL SYSTEM

(a) Check whether the wireless door lock functions by operating the transmitter switch (See page DL-46).
HINT:
When the wireless door LOCK/UNLOCK operation can be performed, it means that the wireless signal from the transmitter is properly input to the multiplex network body ECU.

Result

Result	Proceed to
Wireless door lock functions but hazard warning light answer-back does not occur.	A
Wireless door lock functions but wireless door lock buzzer answer-back does not occur.	B
Wireless door lock functions but hazard warning light answer-back and wireless door lock buzzer answer-back do not occur.	Go to "Only Wireless Door Lock Control Function Does Not Operate" (See page DL-69)

DL

A → **Go to step 3**

B

2 CHECK HAZARD WARNING LIGHTS

(a) Check that the hazard warning lights blink when the hazard warning signal switch is pressed.

NG → **GO TO LIGHTING SYSTEM**

OK

REPLACE MULTIPLEX NETWORK BODY ECU

3	INSPECT WIRELESS DOOR LOCK BUZZER

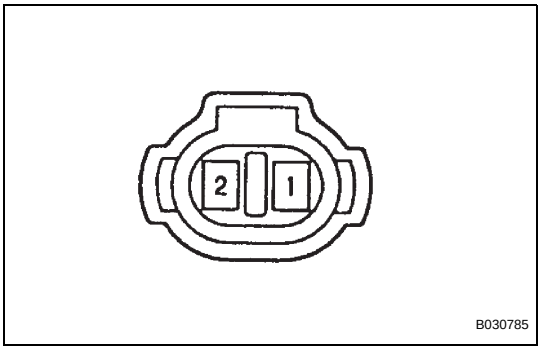

(a) Check the buzzer resistance.
NOTICE:
- **The buzzer circuit is built into the body ECU, not into the buzzer itself.**
- **When battery voltage is directly applied to the buzzer, the buzzer does not sound.**

(1) Check the resistance between terminals of the buzzer.
Standard resistance

Terminal No.	Specified Condition
1 - 2	Approx. 1kΩ

NG → **REPLACE WIRELESS DOOR LOCK BUZZER**

OK

4	CHECK HARNESS AND CONNECTOR (WIRELESS DOOR LOCK BUZZER - MULTIPLEX NETWORK BODY ECU)

DL

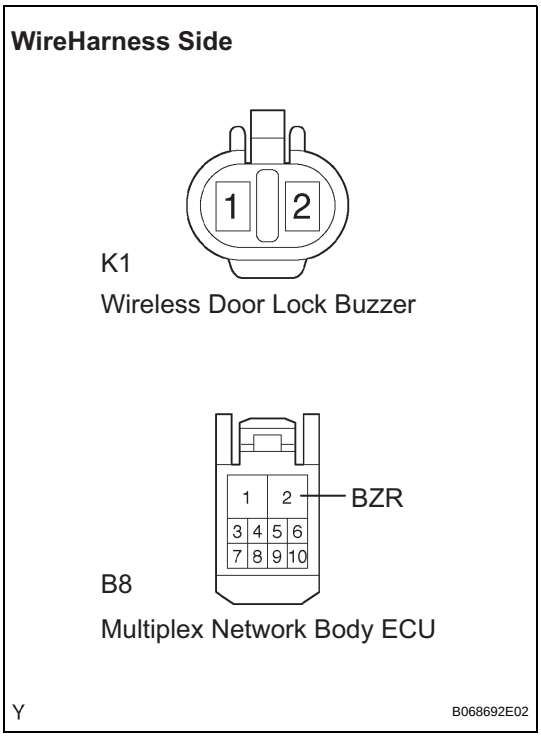

(a) Disconnect the K1 wireless buzzer connector and B8 ECU connector.
(b) Measure the resistance according to the value(s) in the table below.
Standard resistance

Terminal No.	Specified Condition
K1-1 - BZR (B8-2)	Below 1 Ω
BZR (B8-2) - Body ground	10 kΩ or higher
K1-2 - Body ground	Below 1 Ω

NG → **REPAIR OR REPLACE HARNESS OR CONNECTOR**

OK

REPLACE MULTIPLEX NETWORK BODY ECU