Only Wireless Door Lock Control Function does not Operate

DESCRIPTION

The door control receiver receives a signal from the transmitter and sends this signal to the multiplex network body ECU. Then, the multiplex network body ECU controls operation of the door locks and power windows.

Then, the power slide door ECU causes the power slide door to open or close when it receives a signal from the transmitter via the door control receiver and multiplex network body ECU. Also, the power back door ECU causes the power back door to open or close when it receives a signal from the transmitter via the door control receiver and multiplex network body ECU.

WIRING DIAGRAM

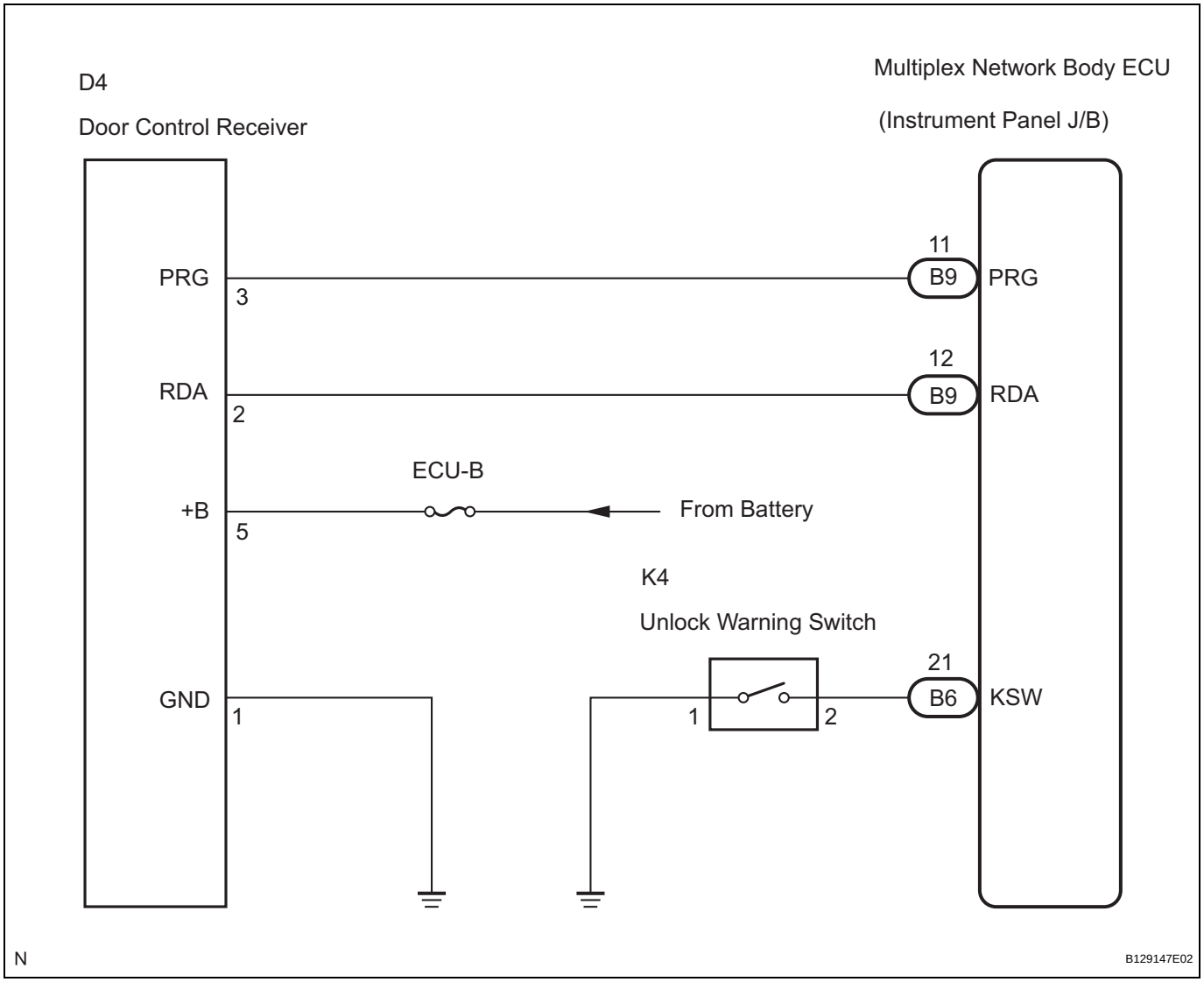

INSPECTION PROCEDURE

1	CHECK WIRELESS DOOR LOCK CONTROL SYSTEM

(a) Check the wireless door lock control system (See page DL-46).

OK → END

NG

2 REPLACE TRANSMITTER BATTERY

(a) After replacing the transmitter battery with a new or normal one, check that the doors can lock and unlock, using the transmitter LOCK/UNLOCK switch.

OK → REPLACE TRANSMITTER BATTERY

NG

3 CHECK WIRELESS DOOR LOCK (STANDARD OPERATION)

(a) Using the transmitter to LOCK/UNLOCK doors in standard operation, check that the doors can lock and unlock.

NOTICE:
Standardized test procedure: Press the transmitter switch for 1 second, directing the beam to driver's door outside handle from a distance of 1 m (39.4 in.). The transmitter should be pointed directly at the door handle, i.e at 90° angle to the vehicle body.

NG → REPLACE DOOR CONTROL TRANSMITTER

OK

4 CHECK WIRELESS DOOR LOCK BUZZER

(a) Check that the wireless door lock buzzer sounds.

Result

Condition	Proceed to
Buzzer sounds	A
Buzzer does not sound	Go to "No Answer-Back (Hazard Warning Light and Wireless Door Lock Buzzer)" (See page DL-64)

A

5 SWITCH TO SELF DIAGNOSTIC MODE

(a) When using the intelligent tester:
Switch to the self-diagnostic mode on the intelligent tester.
(1) Connect the intelligent tester to the DLC3.
(2) Turn the ignition switch ON and push the intelligent tester main switch ON.
HINT:
Please refer to the intelligent tester operator's manual for further details.

(b) When not using the intelligent tester:
Switch to the self-diagnostic mode by operating the ignition key cylinder.
(1) Insert the key into the ignition key cylinder and remove it under the initial vehicle condition (See page DL-46).
(2) Within 5 seconds after the above step, insert the key into the ignition key cylinder and turn the ignition switch from ON to OFF once.
(3) Within 30 seconds after the above step, turn the ignition switch from ON to OFF 9 times.
NOTICE:
If operation has failed, the system will return to the normal mode.
HINT:
- Operation of the ignition switch from OFF to ON will end the self-diagnostic mode.
- Do not lock or unlock doors during the self-diagnostic mode.

(c) Check that the system has switched to self-diagnostic mode by the answer-back of the wireless door lock buzzer sound.

Buzzer Output:

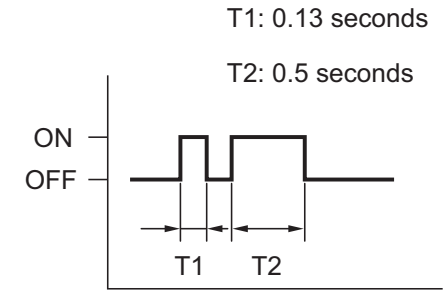

N B110075E01

NG → **Go to step 10**

OK

6	CHECK SELF DIAGNOSTIC MODE

(a) Inspect the diagnosis outputs when the door control transmitter switch is held down (The diagnosis outputs can be checked with the sound of the wireless door lock buzzer).

DL

Buzzer Output:

Normal Wave (LOCK Switch):

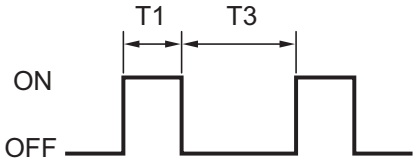

Normal Wave (UNLOCK Switch):

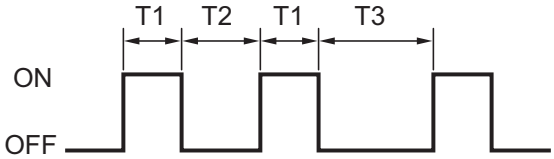

Normal Wave (POWER SLIDE DOOR, POWER BACK DOOR or PANIC switch):

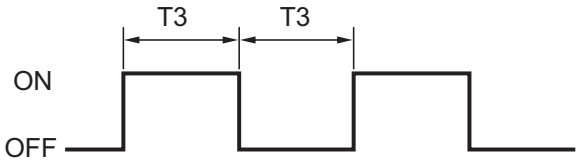

Unmatched Recognition Code:

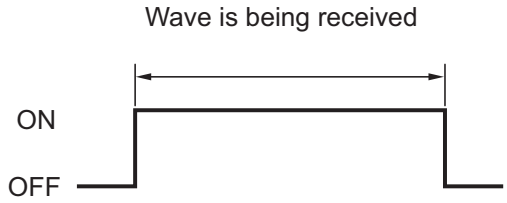

No Diagnostic Output:



T1: 0.13 seconds

T2: 0.25 seconds

T3: 0.5 seconds

N

B110076E13

Result

Condition	Proceed to
Normal waves patterns from the wireless door lock buzzer are output for LOCK, UNLOCK, PANIC or PWR DOOR	A
Unmatched recognition code is output.	B
No diagnostic outputs are recorded	C

A → **Go to step 18**

C → **Go to step 8**

B

7 REGISTER RECOGNITION CODE

(a) Check that the system can switch to rewrite mode or add mode and also check wether a recognition code can be registered.

NG → **Go to step 9**

OK

END

8	CHECK DOOR CONTROL RECEIVER

(a) When a new or normal door control transmitter switch for the same type vehicle is held down, check that a diagnosis of unmatching recognition code is output.

NG → **Go to step 14**

OK

REPLACE DOOR CONTROL TRANSMITTER

9	REPLACE DOOR CONTROL RECEIVER

(a) Replace the door control receiver with normal one.
OK:
The system returns to normal operation.

NG → **Go to step 18**

OK

REPLACE DOOR CONTROL RECEIVER

10	CONFIRM SELF DIAGNOSTIC MODE

(a) When the input method for switching the system to self-diagnostic mode is correct, proceed to A.
(b) When the input method for switching the system to self-diagnostic mode is incorrect, proceed to B.

B → **Go to step 5**

A

11	READ VALUE OF DATA LIST

(a) Using the intelligent tester, check the DATA LIST for proper functioning of the un-lock warning switch.

BODY (Multiplex network body ECU):

Tester Display	Measurement Item/Range	Normal Condition	Diagnostic Note
KEY UNLK WRN SW	Un-lock warning switch signal/ON or OFF	ON: Key is in ignition key cylinder OFF: No key is in ignition key cylinder	-

OK → Go to step 14

NG

12 INSPECT UN-LOCK WARNING SWITCH ASSEMBLY

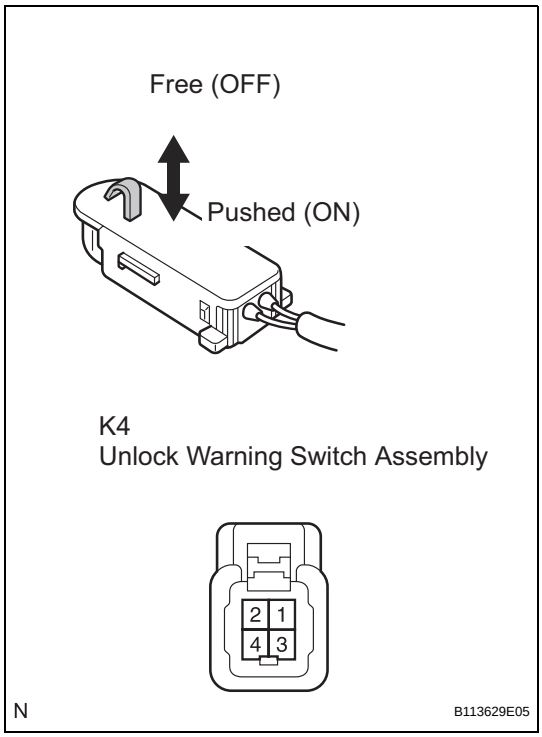

(a) Inspect the resistance of the un-lock warning switch.
Standard resistance

Terminal No.	Condition	Specified Condition
1 - 2	Switch free (Key removed)	10 kΩ or higher
1 - 2	Switch pushed (Key set)	Below 1 Ω

NG → REPLACE UN-LOCK WARNING SWITCH ASSEMBLY

OK

DL

13 CHECK HARNESS AND CONNECTOR (MULTIPLEX NETWORK BODY ECU - UN-LOCK WARNING SWITCH)

Multiplex Network Body ECU (Wire Harness Side) Connector Front View:

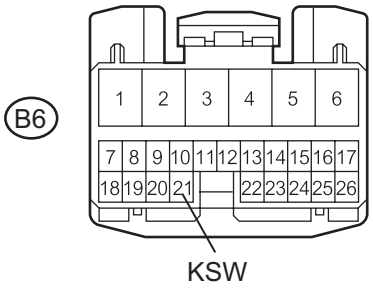

Unlock Warning Switch (Wire Harness Side) Connector Front View:

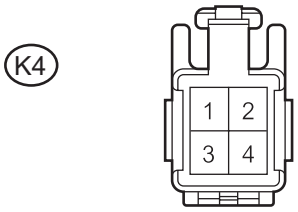

H

B110078E06

(a) Disconnect the B6 ECU connector and K4 switch connector.
(b) Measure the resistance according to the value(s) in the table below.

Standard resistance

Symbol (Terminal No.)	Specified Condition
KSW (B6-21) - K4-2	Below 1 Ω
KSW (B6-21) - Body ground	10 kΩ or higher
K4-1 - Body ground	Below 1 Ω

NG → **REPAIR OR REPLACE HARNESS OR CONNECTOR**

OK

14 CHECK HARNESS AND CONNECTOR (DOOR CONTROL RECEIVER - BODY GROUND)

Wire Harness Side:

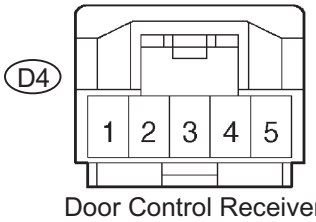

B059092E04

(a) Disconnect the D4 receiver connector.
(b) Measure the resistance according to the value(s) in the table below.

Standard

Symbol (Terminal No.)	Specified Condition
+B (D4-5) - Body ground	10 to 14 V
GND (D4-1) - Body ground	Below 1 Ω

NG → **REPAIR OR REPLACE HARNESS OR CONNECTOR**

OK

DL

15	CHECK DOOR CONTROL RECEIVER (OUTPUT)

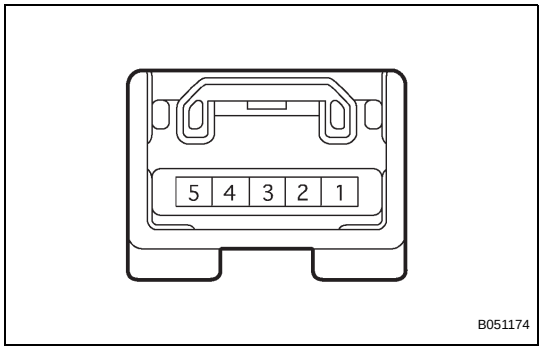

(a) Reconnect the D4 receiver connector.
(b) Measure the resistance according to the value(s) in the table below.

Standard

Terminal No.	Condition	Specified Condition
RDA (D4-2) - Body ground	No key in ignition key cylinder, all doors closed and each transmitter switch OFF → ON	Below 1 V → Approx. 6 to 7 V → Below 1 V

OK → Go to step 17

NG

16	CHECK HARNESS AND CONNECTOR (MULTIPLEX NETWORK BODY ECU - DOOR CONTROL RECEIVER)

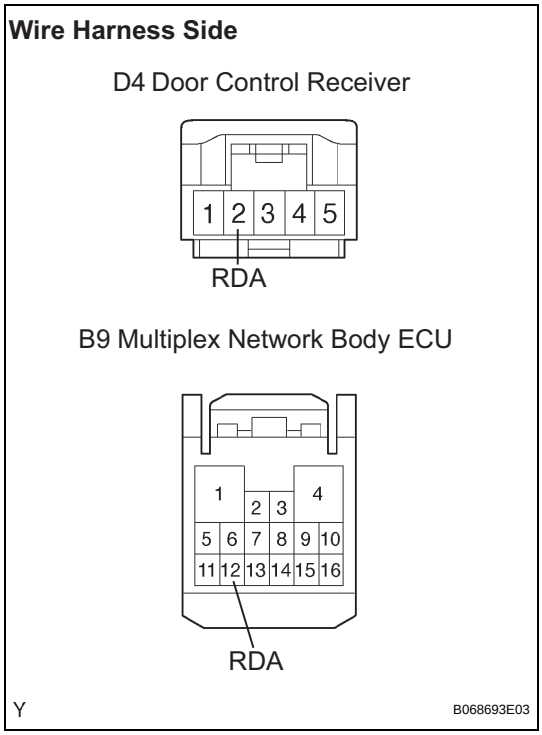

(a) Disconnect the D4 receiver connector and B9 ECU connector.
(b) Measure the resistance according to the value(s) in the table below.

Standard resistance

Symbol (Terminal No.)	Specified Condition
RDA (D4-2) - RDA (B9-12)	Below 1 Ω
RDA (D4-2) - Body ground	10 kΩ or higher
RDA (B9-12) - Body ground	10 kΩ or higher

NG → REPAIR OR REPLACE HARNESS OR CONNECTOR

OK

17	REPLACE DOOR CONTROL RECEIVER

(a) Replace the door control receiver with normal one.

OK:

The system returns to normal operation.

OK → REPLACE DOOR CONTROL RECEIVER

NG

18	REPLACE MULTIPLEX NETWORK BODY ECU

(a) Replace the multiplex network body ECU with normal one.

OK:

The system returns to normal operation.

NG → **REPLACE INSTRUMENT PANEL JUNCTION BLOCK ASSEMBLY**

OK

REPLACE MULTIPLEX NETWORK BODY ECU