DATA LIST / ACTIVE TEST

1. READ DATA LIST

HINT:

Using the intelligent tester's DATA LIST allows switch, actuator and other item values to be read without removing any parts. Reading the DATA LIST early in troubleshooting is one way to save time.

(a) Connect the intelligent tester with CAN VIM to the DLC3.

(b) Turn the ignition switch ON.

(c) Read the DATA LIST.

BODY (Body ECU):

Item	Measurement Item / Display (Range)	Normal Condition	Diagnostic Note
KEY UNLK WRN SW	Unlock warning switch signal /ON or OFF	ON: Key is in ignition key cylinder OFF: No key is in ignition key cylinder	-
D DOR CTY SW	Driver side door courtesy switch signal /ON or OFF	ON: Driver side door is open OFF: Driver side door is closed	-

Unlock Warning Switch Circuit

DESCRIPTION

The unlock warning switch detects if the key is in the ignition key cylinder.
The unlock warning switch turns on when the key is inserted into the ignition key cylinder and turns off when the key is removed from the cylinder.
The body ECU is connected to the unlock warning switch via terminal KSW and key detection status signals are input to the ECU.
The body ECU applies voltage to the unlock warning switch via terminal KSW. When the unlock warning switch is on (there is continuity between the switch terminals), a signal indicating that the key is in the ignition key cylinder is input to the body ECU. When the switch is off (there is no continuity between the switch terminals), a signal indicating that the key is not in the cylinder is input.

WIRING DIAGRAM

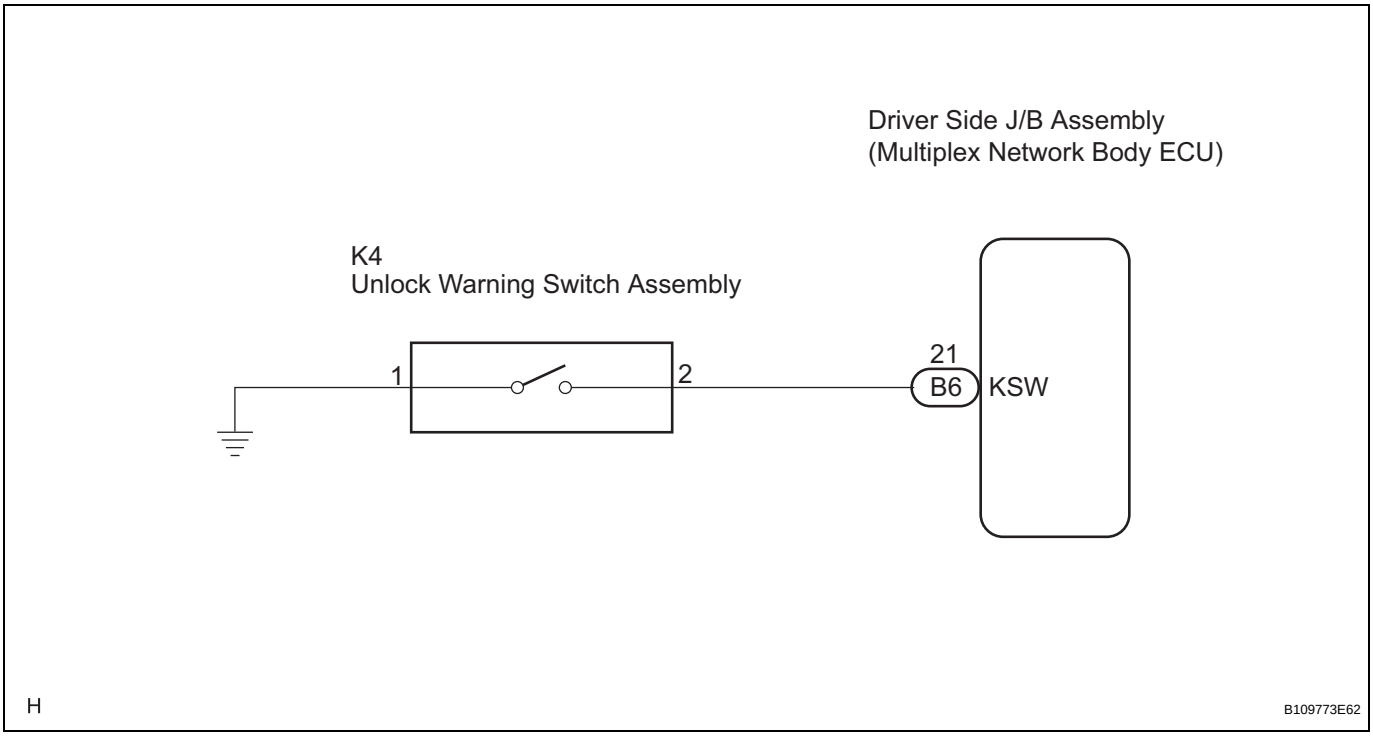

INSPECTION PROCEDURE

1	READ VALUE OF DATA LIST (UNLOCK WARNING SWITCH)

(a) Check the DATA LIST to ensure proper function of the door unlock detection switch.

BODY:

Item	Measurement Item / Display (Range)	Normal Condition	Diagnostic Note
KEY UNLK WRN SW	Unlock warning switch signal /ON or OFF	ON: Key is in ignition key cylinder OFF: No key is in ignition key cylinder	-

OK:
The display is as specified in the normal condition.

NG → **Go to step 2**

OK

PROCEED TO NEXT CIRCUIT INSPECTION SHOWN IN PROBLEM SYMPTOMS TABLE

2 INSPECT UNLOCK WARNING SWITCH ASSEMBLY

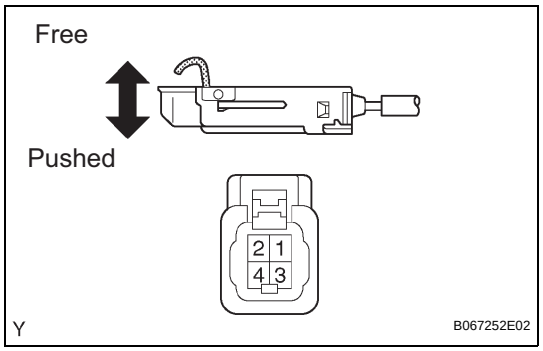

(a) Remove the unlock warning switch assembly.
(b) Measure the resistance according to the value(s) in the table below.

Standard resistance

Tester Connection	Condition	Specified Condition
1 - 2	Free	10 kΩ or higher
1 - 2	Pushed	Below 1 Ω

NG → **REPLACE UNLOCK WARNING SWITCH ASSEMBLY**

OK

3 CHECK WIRE HARNESS (UNLOCK WARNING SWITCH - DRIVER SIDE J/B)

Wire Harness Side:

K4
Unlock Warning Switch Assembly

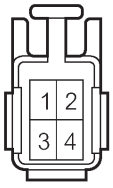

B6
Driver Side J/B Assembly
(Multiplex Network Body ECU)

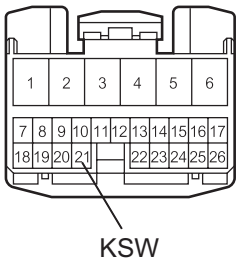

H
B111724E09

(a) Disconnect the K4 unlock warning switch assembly connector.
(b) Disconnect the B6 driver side J/B connector.
(c) Measure the resistance according to the value(s) in the table below.

Standard resistance

Tester Connection	Condition	Specified Condition
K4-2 - B6-21 (KSW)	Always	Below 1 Ω
K4-1 - Body ground	Always	Below 1 Ω

NG → **REPAIR OR REPLACE HARNESS OR CONNECTOR**

DL

OK

PROCEED TO NEXT CIRCUIT INSPECTION SHOWN IN PROBLEM SYMPTOMS TABLE