WIRELESS DOOR LOCK CONTROL SYSTEM

PARTS LOCATION

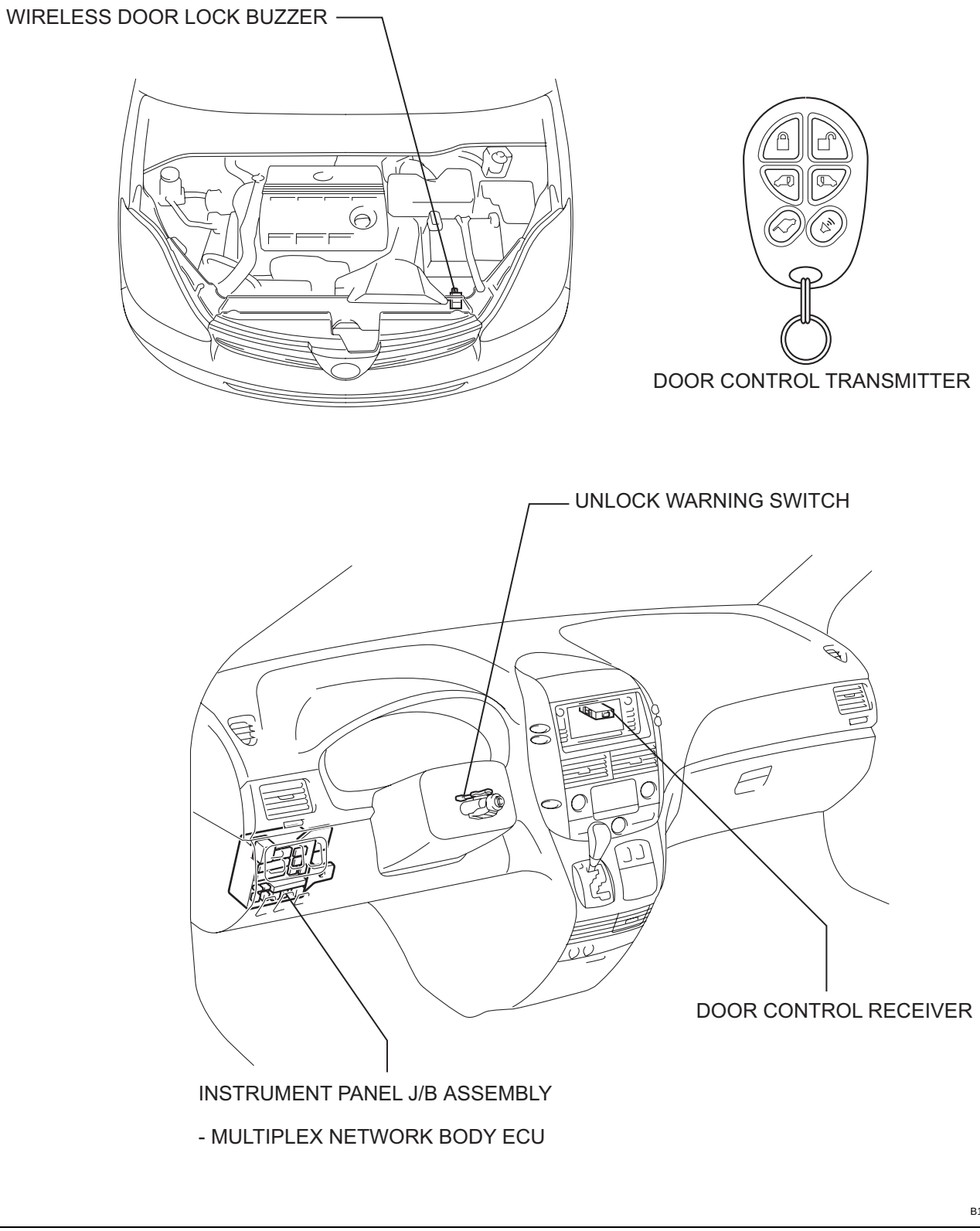

DL

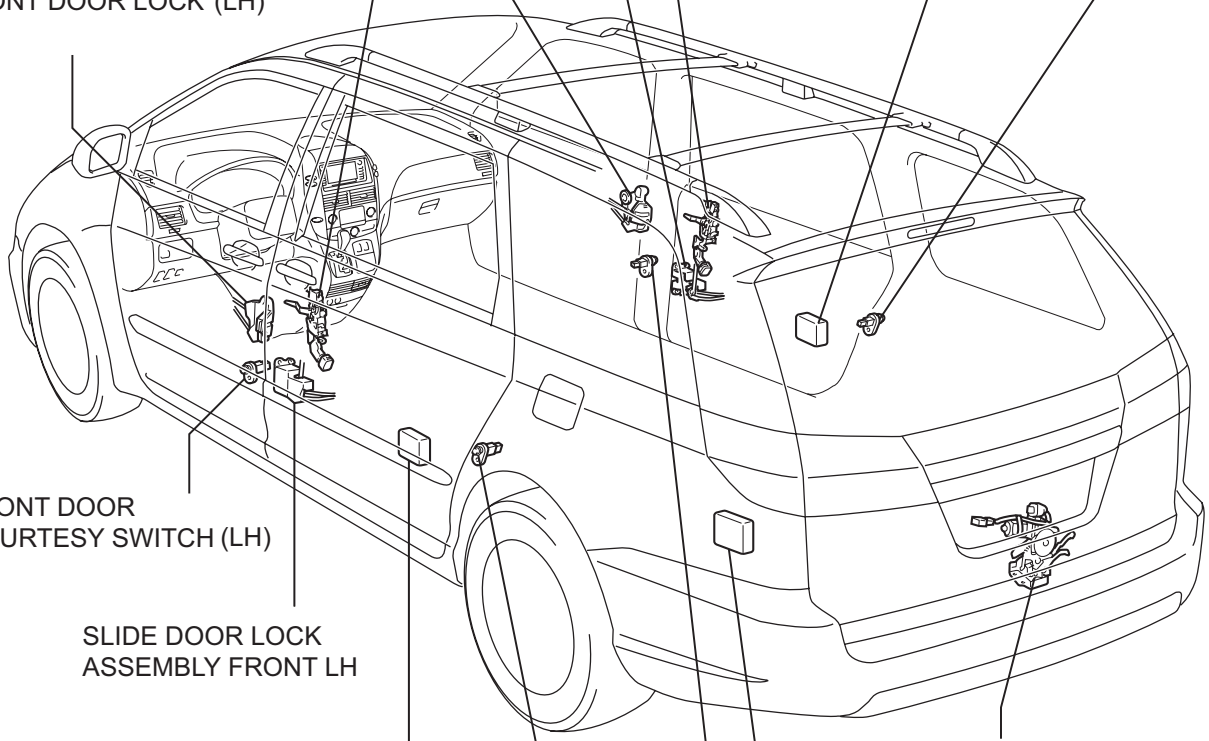

DL

Y

B119226E03