Driver Side Seat Belt Warning Light does not Operate

DESCRIPTION

When turning the ignition switch to the ON position, the combination meter assembly communicates with the supplemental restraint system by the multiplex communication system. Unless the driver side seat belt is fastened, the combination meter assembly will turn on the seat belt warning light for driver side. If the driver side seat belt is fastened, then the combination meter assembly will turn off the driver side seat belt warning light.

WIRING DIAGRAM

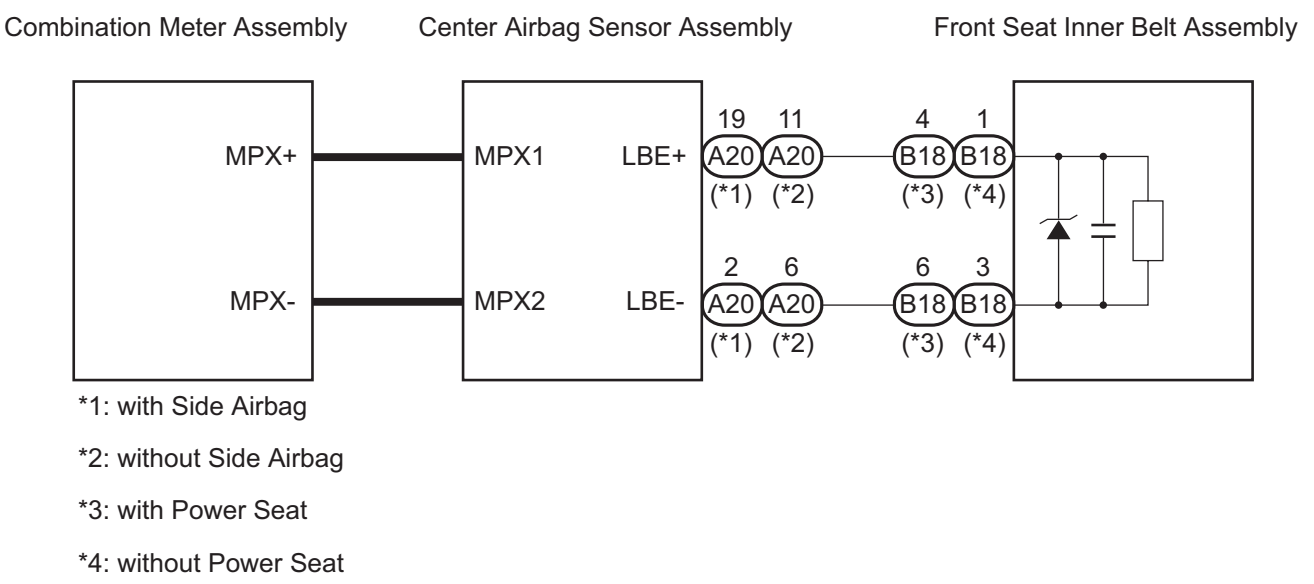

ME

INSPECTION PROCEDURE

1	CHECK MULTIPLEX COMMUNICATION SYSTEM

(a) Check if the MULTIPLEX communication DTC is output (See page MP-14).

Result

Result	Proceed to
DTC is not output	A
DTC is output	B

NG → **REPAIR CIRCUITS INDICATED BY OUTPUT DTCS**

OK

2	PERFORM ACTIVE TEST BY INTELLIGENT TESTER

(a) Connect the intelligent tester to the DLC3.
(b) Turn the ignition switch to the ON position.
(c) Enter the following menus: DIAGNOSIS / OBD/MOBD / METER / ACTIVE TEST.
(d) Check the operation by referring to the value(s) in the table below.

METER:

Tester Display	Test Part	Test Details	Diagnostic Note
D-BELT REMIND	SEAT BELT warning light (Driver side seat belt warning light)	SEAT BELT indicator light OFF/ ON	-

OK:
Warning light condition (ON/OFF) can be switched by "ACTIVE TEST".

NG → **REPLACE COMBINATION METER ASSEMBLY**

OK

3	CHECK DTC

(a) Check if DTC B0126 is output (See page RS-35).

Result

Result	Proceed to
B0126 is not output	A
B0126 is output	B

B → **GO TO AIRBAG SYSTEM**

A

REPLACE CENTER AIR BAG SENSOR ASSEMBLY

ME