Meter Illumination is Always Dark

DESCRIPTION

- Confirm that the vehicle is equipped with the optitron meter, then check this circuit.
- The combination meter assembly receives a auto dimmer signal from the body ECU by the multiplex communication line.

WIRING DIAGRAM

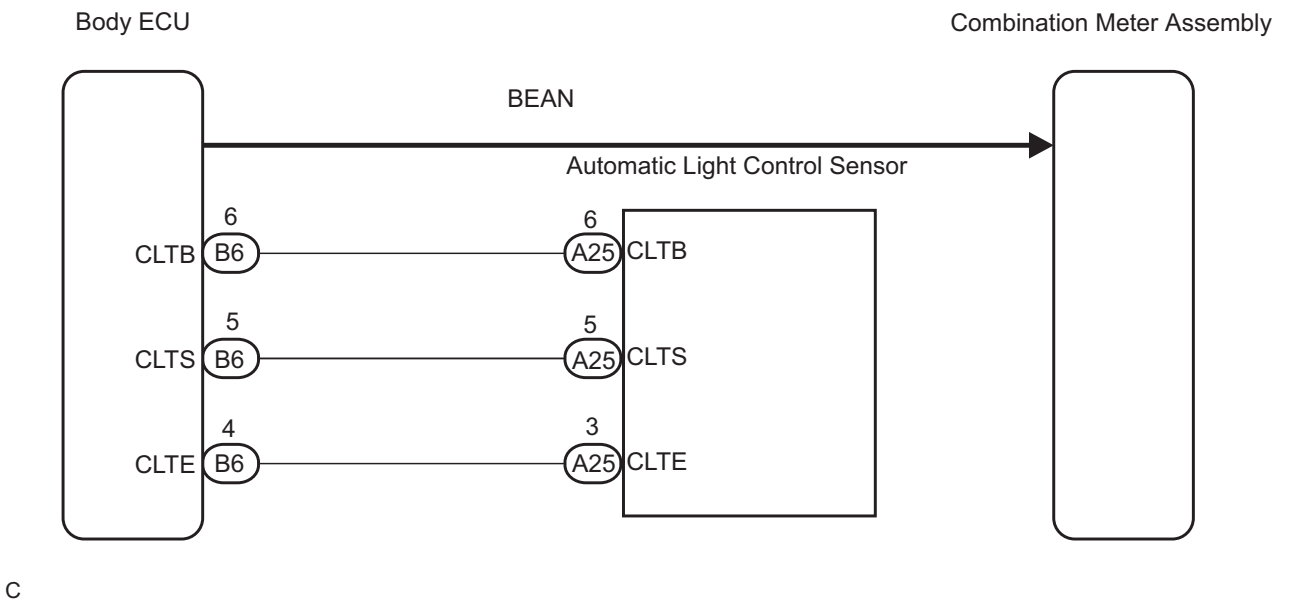

INSPECTION PROCEDURE

1	CHECK MULTIPLEX COMMUNICATION SYSTEM

(a) Check if MULTIPLEX communication DTC is output (See page MP-14).

Result

Result	Proceed to
DTC is not output	A
DTC is output	B

NG → REPLACE CIRCUITS INDICATED BY OUTPUT DTCS

OK

2	CHECK DTC

(a) Check if DTC B1244 is output (See page LI-12).

Result

Result	Proceed to
B1244 is not output	A
B1244 is output	B

B → GO TO LIGHTING SYSTEM

A

3	PERFORM ACTIVE TEST BY INTELLIGENT TESTER

(a) Operate the intelligent tester according to the steps on the display and select "DATA LIST".

MAIN BODY:

Item	Test Details	Diagnostic Note
DIMMER SIG	Auto dimmer signal ON/OFF	OFF: Auto dimmer is OFF ON: Auto dimmer is ON

OK:
The meter illumination is dimmed when the DIMMER SIG is ON.

NG → Go to step 4

OK

ME

CHECK LIGHTING SETTING

4	REPLACE COMBINATION METER ASSEMBLY

OK:
The operation of the combination meter assembly returns to normal.

NG → REPLACE BODY ECU

OK

END