Meter Illumination does not Dim at Night

DESCRIPTION

- Confirm that the vehicle is equipped with the optitron meter, then check this circuit.
- The combination meter assembly receives a auto dimmer signal from the body ECU by the multiplex communication line.

WIRING DIAGRAM

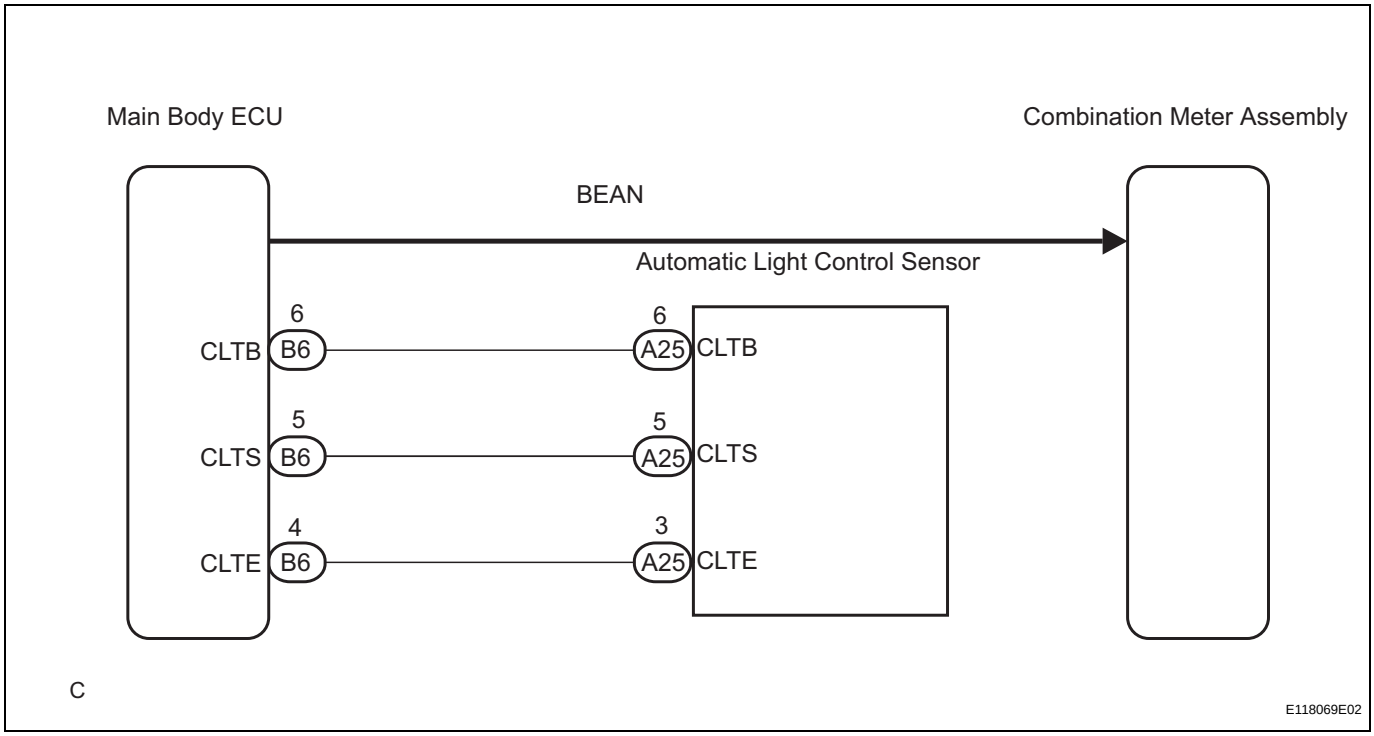

INSPECTION PROCEDURE

1	CHECK MULTIPLEX COMMUNICATION SYSTEM

(a) Check if MULTIPLEX communication DTC is output (See page MP-14).

Result

Result	Proceed to
DTC is not output	A
DTC is output	B

B → **REPAIR CIRCUITS INDICATED BY OUTPUT DTCS**

A

2	CHECK DTC

(a) Check if the DTC B1244 is output (See page LI-12).

Result

Result	Proceed to
B1244 is not output	A
B1244 is output	B

B → **GO TO LIGHTING SYSTEM**

A

3 PERFORM ACTIVE TEST BY INTELLIGENT TESTER

(a) Operate the intelligent tester according to the steps on the display and select "DATA LIST".

MAIN BODY

Item	Test Details	Diagnostic Note
DIMMER SIG	Auto dimmer signal OFF/ON	OFF: Auto dimmer signal is OFF ON: Auto dimmer signal is ON

OK:
The meter illumination is dimmed when the DIMMER SIG is ON.

NG → **Go to step 4**

OK

CHECK LIGHTING SETTING

4 REPLACE COMBINATION METER ASSEMBLY

OK:
The operation of the combination meter assembly returns to normal.

NG → **REPLACE BODY ECU**

OK

END