COMBINATION METER

COMPONENTS

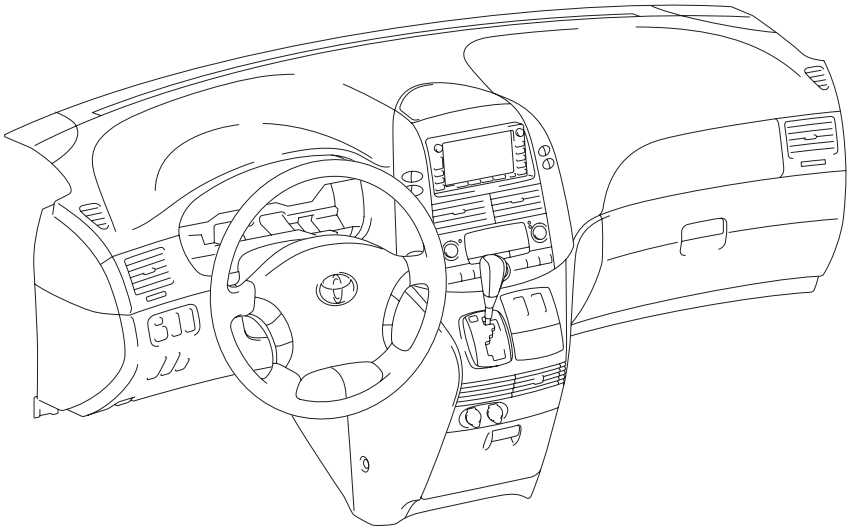

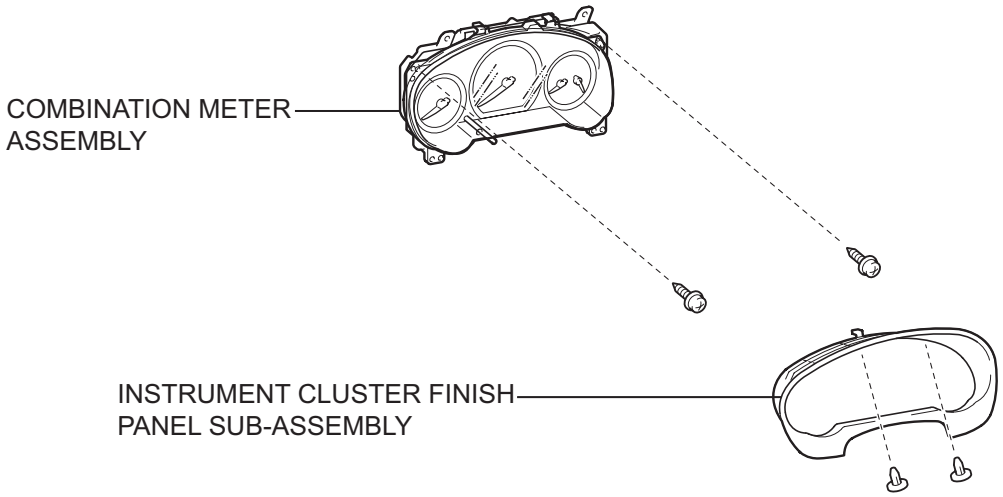

P

A116620E01

REMOVAL

1. DISCONNECT CABLE FROM NEGATIVE BATTERY TERMINAL

CAUTION:

Wait for 90 seconds after disconnecting the cable to prevent the airbag working. (See page RS-1)

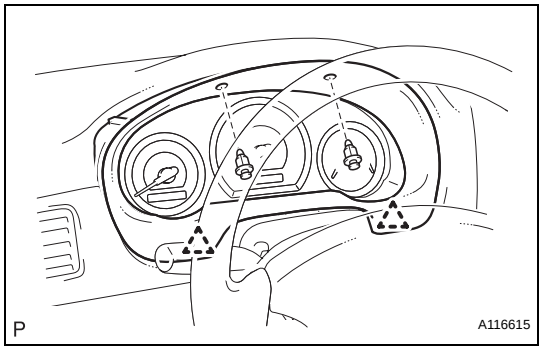

2. REMOVE INSTRUMENT CLUSTER FINISH PANEL SUB-ASSEMBLY

(a) Disengage the 4 clips and remove the instrument cluster finish panel sub-assembly.

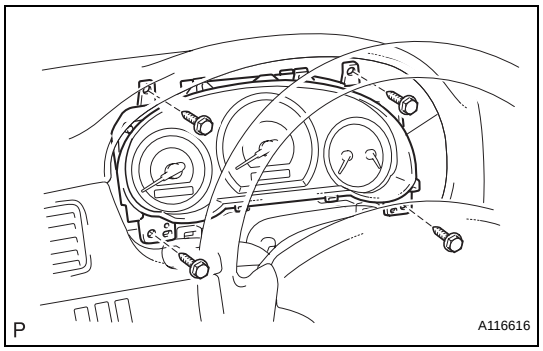

3. REMOVE COMBINATION METER ASSEMBLY

(a) Remove the 4 screws.

(b) Pull out the combination meter assembly, and disconnect the connectors.

ME